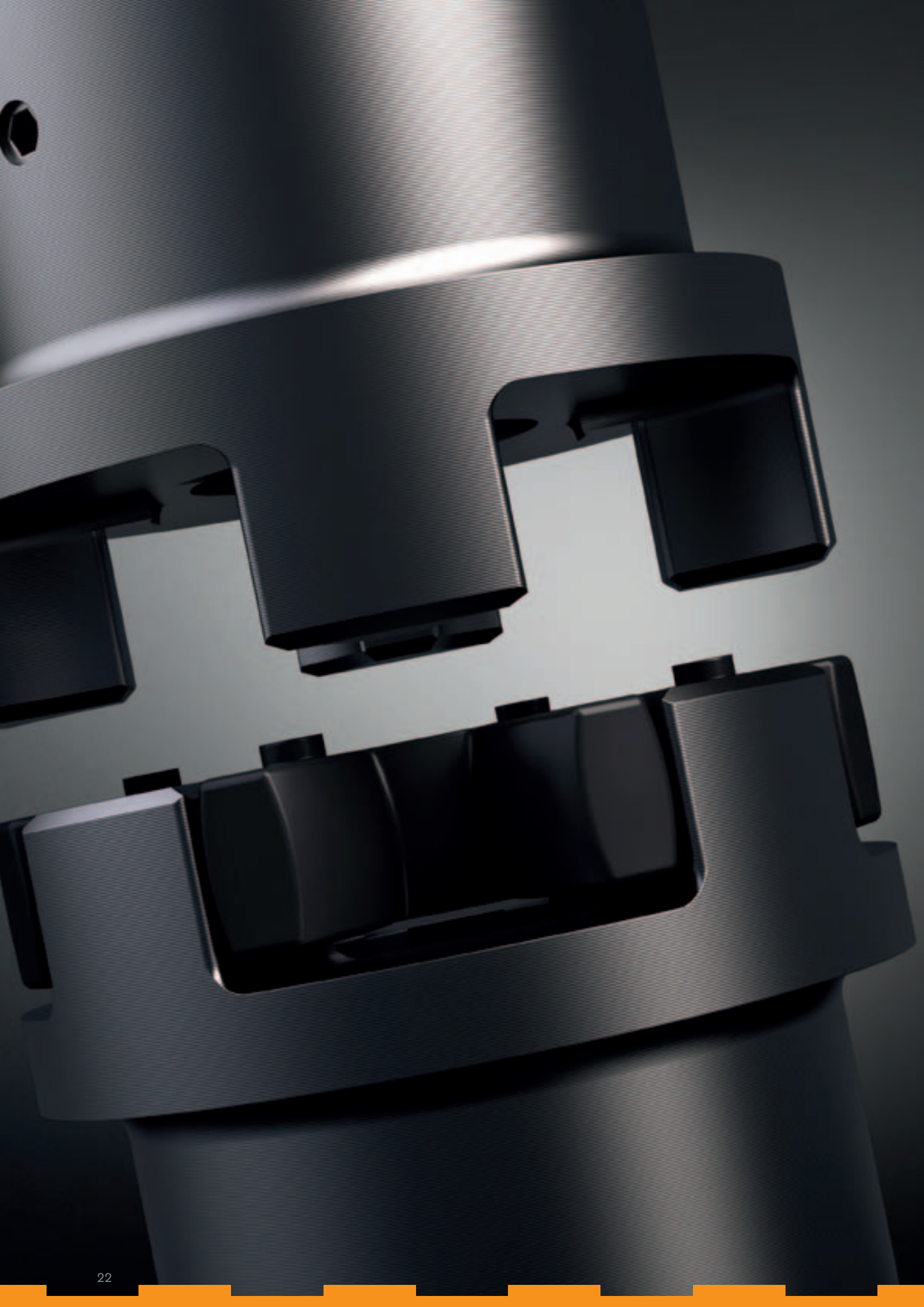

Flexible jaw and pin & bush couplings

Types and operating description 24

ROTEX®
Hub types 26
Displacements 27
Standard spiders 28
Special spiders 30
Selection of standard IEC motors 31
Cylindrical bores and spline bores 32
Inch bores and taper bores 33
Standard type, material cast and powder metal 34
Standard type, material steel / UL / marine 36
Standard type, material aluminium 38
Standard type, material steel with CDP coating and material stainless steel 39
Type with taper clamping bush 40
Type with clamping ring hubs 41
Type with clamping hubs 42
Type with flange programme 43
Type A-H drop-out center design coupling 44
Type S-H drop-out center design coupling with SPLIT hubs 45
Type SP single-cardanic shaft coupling (Non Sparking) 46
Type SP ZS-DKM-C double-cardanic shaft coupling (Non Sparking) 47
Type ZS-DKM-H double-cardanic shaft coupling 48
Type DKM double-cardanic shaft coupling 49
Type CF, CFN, DF, DFN flange programme 50
Type ZR intermediate shaft programme 51
Type BTAN and SBAN with brake druml / with brake disk 52
Type AFN-SB drop-out center design coupling with brake disk 54
Type SD shiftable coupling shiftable at standstill 55
Type FNN for mounting of fan 56
Other types with clamping sets 57
Other types with torque limiters 58
Weights and mass moments of inertia 59

POLY-NORM®
Technical data 61
Selection of standard IEC motors 62
Type AR, two-part 63
Type AR for taper clamping bush 64
Type ADR, three-part 65
Types BTA, SBA with brake drum, brake disk 66
Type ADR-SB with brake disk for stop brake 67
Type AZR, standard drop-out center design coupling 68

POLY
Selection of standard IEC motors 69
Type PKZ, two-part and PKD, three-part 70
Type PKA, drop-out center design coupling 71
Displacements / elastomer sets / screws 72

REVOLEX®
Technical data 73
Type KX-D, material cast 74
Type KX-D, material steel 75
Type KX-D with brake disk 76
Technical data of pins 78
Assembly / other types 79

ROTEX®

POLY-NORM®

POLY

REVOLEX®

FLEXIBLE JAW AND PIN & BUSH COUPLINGS
TYPES AND OPERATING DESCRIPTION

Properties of flexible jaw and pin & bush couplings

			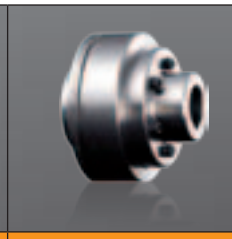	
Product	**ROTEX®**	**POLY-NORM®**	**POLY**	**REVOLEX®**
Type	Torsionally flexible jaw-type coupling			Torsionally flexible pin & bush coupling
Properties				
Torsionally flexible	●	●	●	●
Damping vibrations	●	●	●	●
Maintenance-free	●	●	●	●
Axial plug-in	●	●	●	●
Shear type			●	
Fail-safe	●	●		●
Compensating for misalignment	●	●	●	●
Types				
Variant diversity	very high	average	average	high
Special features	Extensive basic programme available from stock while customized solutions can be realized	Basic programme available from stock	Basic programme available from stock	Extensive programme, ideal for customized solutions, for applications with high performances
Applications/core industries	Manifold applications, applicable in all industries	Pump industry, industrial gearboxes	Chemical pumps, high-pressure pumps,...	Industrial gearboxes, conveyor systems, industrial fans, ropeways, agitators, generators, ...
Surface	Allover machining, very good dynamic properties	Shell surface machined	Shell surface machined	Allover machining, very good dynamic properties
Torque range TKN [Nm]				
Min.	1	40	42	3800
Max.	35.000	67.000	6.100	1.220.000
Max. circumferential speed v [m/s]				
Cast EN-GJL (dynamic balancing)	35	35	35	35
Steel + cast EN-GJS (dynamic balancing)	60			60
Hub materials available				
Steel (semi-finished product) » customized solutions available	●			●
Cast iron (GJL) » subject to mould	●	●	●	●
Nodular iron (GJS) » subject to mould	●	○		○
Aluminium semi-finished product (Al-H) » customized solution available	●			
Aluminium diecast (Al-D)	●			
Stainless steel	●			
Corrosion-protected types	●	○	○	○
Spiders / elastomers				
Material	T-PUR, PA, PEEK, Hytrell, ...	NBR (up to size 180) T-PUR (from size 200)	NBR	NR, NBR NBR electrically insulating
Degree of hardness	flexible to torsionally rigid	flexible	flexible	flexible
Temperature range in °C, min. / max. (standard)	- 50 / + 120	- 30 / + 80	- 30 / + 80	- 30 / + 80
Temperaturbereich in °C, min. / max. (Sonder)	- 50 / + 250	- 30 / + 80	- 30 / + 80	- 50 / + 80

● ≈ Standard
○ ≈ On request

FLEXIBLE JAW AND PIN & BUSH COUPLINGS
TYPES AND OPERATING DESCRIPTION

Product finder of jaw and pin & bush couplings

Product	**ROTEX®**	**POLY-NORM®**	**POLY**	**REVOLEX®**
Type	Torsionally flexible jaw-type coupling			Torsionally flexible pin & bush coupling
Geometries				
Design	compact	short	short	short
Mass moment of inertia	low	average	high	average
Shaft distance dimension	low / average	low	low	low
Types (extract)				
Elastomers can be disassembled radially » with no need of displacing driving/driven side	AFN, A-H, S-H, ZR, DF, DNF, CF-H	ADR, ADR-SB	PKD	standard
Intermediate shaft types » bridging larger shaft distances	ZR, ZWN	–	–	customized
Standard spacers 100 mm to 250 mm	ZS-DKM-H	AZR	PKA	customized
Shaft-to-shaft connection	standard	standard	standard	standard
Flange-to-shaft connection	CF, CFN	–	–	customized
Flange-to-flange connection » particularly short mounting lengths	DF, DNF	–	–	customized
Double-cardanic » compensating for big displacements » lower restoring forces	ZS-DKM-H, ZR, ZWN	–	–	–
Certifications/type examinations				
ATEX	●	●	●	●
UL-listed	●			
GOST R/ GOST TR	●	●	●	●
DNV/GL	●			●
ABS	●			O
Bureau Veritas	●			O
LR	O			O
RS CLASS	O			O
CCS	O			O

● ≈ Standard
O ≈ On request

Hub types

Due to the numerous applications of ROTEX® for many different applications and mounting situations, this coupling system is available with various hub types. These types mainly differ in that they offer either positive or frictionally engaged connections, but mounting situations like, for example, gear shafts with integrated transmission cams or similar applications are covered, too.

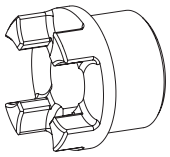

Type 1.0 hub
with feather keyway and setscrew

Positive locking power transmission, permissible torque depending on the permissible surface pressure. Not suitable for backlash-free power transmission with heavily reversing operation.

Type 1.1 hub
without feather keyway with setscrew

Non-positive torque transmission for crimp and glued connections. (No ATEX-release)

Type 1.3 hub
with spline bore (see page 20)

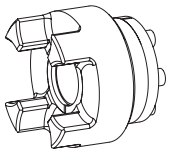

Type 4.2 hub
with CLAMPEX® clamping set KTR 250

Frictionally engaged, backlash-free shaft-hub-connection for the transmission of average torques.

Type 4.1 for CLAMPEX® clamping set KTR 200
type 4.3 for CLAMPEX® clamping set KTR 400

Frictionally engaged, backlash-free shaft-hub-connection for the transmission of high torques.

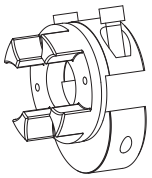

Type 7.5 clamping hub type DH
without feather keyway for
double-cardanic connection

Frictionally engaged, backlash-free shaft-hub-connection for radial assembly of coupling. Transmittable torques depending on bore diameter (For ATEX category 3 only)

Type 7.6 clamping hub type DH
with feather keyway for
double-cardanic connection

Positive locking power transmission with additional friction fit for radial assembly of coupling. The frictional engagement avoids or reduces the reverse backlash. Surface pressure of the keyway connection is reduced.

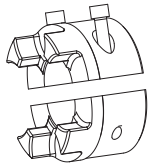

Type 7.0 SPLIT hub
without feather keyway

Split hub made of cast iron. Frictionally engaged, backlash-free shaft-hub-connection-. Transmittable torques depending on bore diameter (For ATEX category 3 only)

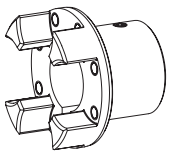

FNN hub

Coupling hub to be connected to an attachment such as brake drum, brake disk and fan.

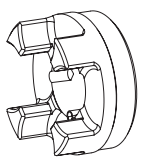

TB1 hub/TB2 hub

Coupling hub for taper clamping bushes. TB1 screwed on cam side. TB2 screwed externally.

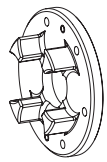

Mitnehmerflansch Ausf. 3b

Driving flange to connect to customer's component. Abmessungen siehe Seite 38

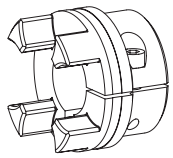

Type 2.0 clamping hub
single slotted without feather keyway

Frictionally engaged, backlash-free shaft-hub-connection-. Transmittable torques depending on bore diameter (see page 34). (For ATEX category 3 only)

Type 2.1 clamping hub
single slotted with feather keyway

Positive locking power transmission with additional frictionally engaged condition. The frictional engagement avoids or reduces the reverse backlash. Surface pressure of the keyway connection is reduced.

Type 2.3 clamping hub
with spline bore (see page 29/30)

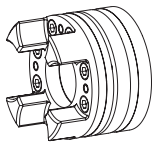

Type 6.0 clamping ring hub
(see ROTEX® GS series)

Integrated frictionally engaged shaft-hub-connection for the transmission of higher torques. Screwing on elastomer side. For details about torque and dimensions see page 29. Suitable for high speeds.

Type 6.5 clamping ring hub
(see ROTEX® GS series)

Design like 6.0, except for clamping screws externally. As an example for radial disassembly of intermediate pipe (special design).

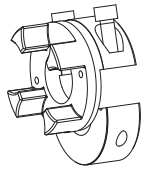

Type 7.8 clamping hub type H
without feather keyway

Frictionally engaged, backlash-free shaft-hub-connection for radial assembly of coupling. Transmittable torques depending on bore diameter (For ATEX category 3 only)

Type 7.9 clamping hub type H
with feather keyway

Positive locking power transmission with additional friction fit for radial assembly of coupling. The frictional engagement avoids or reduces the reverse backlash. Surface pressure of the keyway connection is reduced.

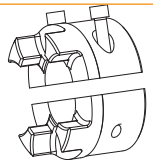

Type 7.1 SPLIT hub
with feather keyway

Split hub made of cast iron. Positive locking power transmission with additional frictionally engaged condition. The frictional engagement avoids or reduces the reverse backlash. Surface pressure of the keyway connection is reduced.

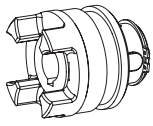

SD hub shifting hub

Coupling hub for separating or switching on the driving/ driven machine with standstill of the machine. Can be combined with slip ring and shiftable linkage.

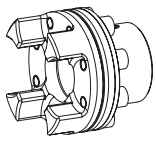

Type 3Na + 4N
Driving flange with flange type K

For type AFN and BFN:
With type AFN the spider can be replaced while being assembled without having to disassemble the driving and driven side.

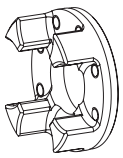

Mitnehmerflansch Ausf. 3Na

Driving flange to connect to customer's component. Abmessungen siehe Seite 38

Displacements

Axial displacement ΔKa

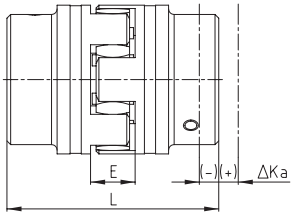

$L_{max.} = L + \Delta Ka$

Radial displacement ΔKr

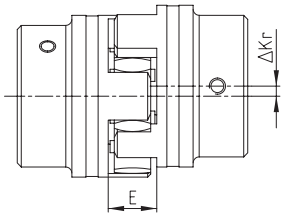

Angular displacement ΔKw [degrees]

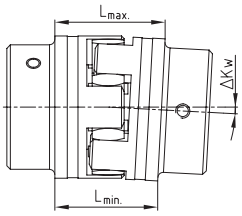

$\Delta Kw\ [mm] = L_{max} - L_{min}$

Displacements for spider 92 and 98 Shore-A																	
ROTEX® Size	14	19	24	28	38	42	48	55	65	75	90	100	110	125	140	160	180
Max. axial displacement ΔKa [mm]	-0,5 +1,0	-0,5 +1,2	-0,5 +1,4	-0,7 +1,5	-0,7 +1,8	-1,0 +2,0	-1,0 +2,1	-1,0 +2,2	-1,0 +2,6	-1,5 +3,0	-1,5 3,4	-1,5 +3,8	-2,0 +4,2	-2,0 +4,6	-2,0 +5,0	-2,5 +5,7	-3,0 +6,4
Max. radial displacement with n= 1500 RPM ΔKr [mm]	0,17	0,20	0,22	0,25	0,28	0,32	0,36	0,38	0,42	0,48	0,50	0,52	0,55	0,60	0,62	0,64	0,68
Max. angular displacement with n= 1500 RPM ΔKw [degrees]	1,2	1,2	0,9	0,9	1,0	1,0	1,1	1,1	1,2	1,2	1,2	1,2	1,3	1,3	1,2	1,2	1,2
ΔKw [mm]	0,67	0,82	0,85	1,05	1,35	1,70	2,00	2,30	2,70	3,30	4,30	4,80	5,60	6,50	6,60	7,60	9,00

Displacements for spider 64 Shore-D																	
ROTEX® size	14	19	24	28	38	42	48	55	65	75	90	100	110	125	140	160	180
Max. axial displacement ΔKa [mm]	-0,5 +1,0	-0,5 +1,2	-0,5 +1,4	-0,7 +1,5	-0,7 +1,8	-1,0 +2,0	-1,0 +2,1	-1,0 +2,2	-1,0 +2,6	-1,5 +3,0	-1,5 +3,4	-1,5 +3,8	-2,0 +4,2	-2,0 +4,6	-2,0 +5,0	-2,5 +5,7	-3,0 +6,4
Max. radial displacement with n= 1500 RPM ΔKr [mm]	0,11	0,13	0,15	0,18	0,21	0,23	0,25	0,27	0,30	0,34	0,36	0,37	0,40	0,43	0,45	0,46	0,49
Max. angular displacement with n= 1500 RPM ΔKw [degrees]	1,1	1,1	0,8	0,8	0,9	0,9	1,0	1,0	1,1	1,1	1,1	1,1	1,2	1,2	1,1	1,1	1,1
ΔKw [mm]	0,57	0,76	0,76	0,90	1,25	1,40	1,80	2,00	2,50	3,00	3,80	4,30	5,30	6,00	6,10	7,10	8,00

Displacements for spider PA, PEEK															
ROTEX® size	14	19	24	28	38	42	48	55	65	75	90	100	110	125	140
Max. axial displacement ΔKa [mm]	-0,5 +1,0	-0,5 +1,2	-0,5 +1,4	-0,7 +1,5	-0,7 +1,8	-1,0 +2,0	-1,0 +2,1	-1,0 +2,2	-1,0 +2,6	-1,5 +3,0	-1,5 +3,4	-1,5 +3,8	-2,0 +4,2	-2,0 +4,6	-2,0 +5,0
Max. radial displacement with n= 1500 RPM ΔKr [mm]	0,08	0,10	0,11	0,12	0,14	0,16	0,18	0,19	0,21	0,24	0,25	0,26	0,27	0,30	0,31
Max. angular displacement with n= 1500 RPM ΔKw [degrees]	0,60	0,45	0,45	0,50	0,50	0,55	0,55	0,55	0,60	0,60	0,60	0,60	0,65	0,65	0,60
ΔKw [mm]	0,33	0,41	0,42	0,52	0,67	0,85	1,00	1,15	1,35	1,65	2,15	2,40	2,80	3,25	3,30

The above-mentioned figures of displacement of flexible ROTEX® couplings are standard values taking into account the load of the coupling up to the rated torque TKN and an operating speed n = 1500 rpm along with an ambient temperature of + 30° C.
The displacement figures may only be used one by one - if they appear simultaneously, they must be limited in proportion. Care should be taken to maintain the distance dimension E accurately in order to allow for axial clearance of the coupling while in operation. Detailed mounting instructions are shown on our homepage (www.ktr.com).

Properties of standard spiders

Spider type (Shore hardness)	92 Shore-A (T-PUR®)	DZ 92 Shore-A (T-PUR®)	92 Shore-A
	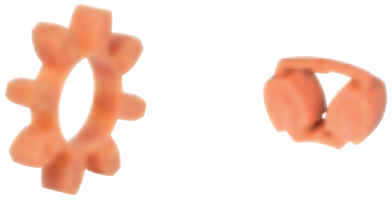 T-PU R®		
Size	14 to 180	100 to 180	14 to 90
Material	T-PUR®		Polyurethane (PUR)
Permissible temperature range Permanent temperature Short-term temperature	 -50 °C to +120 °C -50 °C to +150 °C		 -40 °C to +90 °C -50 °C to +120 °C
Properties	– significantly higher service life expectancy – very good temperature resistance – improved damping of vibrations – good damping, average elasticity – suitable for all hub materials		– good damping, average elasticity – suitable for all hub materials

Spider type (Shore hardness)	98 Shore-A (T-PUR®) 1)	DZ 98 Shore-A (T-PUR®)	98 Shore-A 1)
	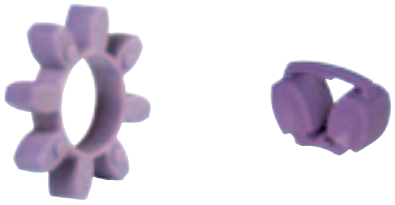 T-PUR®		
Size	14 to 180	100 to 180	14 to 90
Material	T-PUR®		Polyurethane (PUR)
Permissible temperature range Permanent temperature Short-term temperature	 -50 °C to +120 °C -50 °C to +150 °C		 -30 °C to +90 °C -40 °C to +120 °C
Properties	– significantly higher service life expectancy – very good temperature resistance – improved damping of vibrations – transmission of high torques with average damping – recommended hub material: steel, GJL and GJS		– transmission of high torques with average damping – recommended hub material: steel, GJL and GJS

Spider type (Shore hardness)	64 Shore-D (T-PUR®)	DZ 64 Shore-D (T-PUR®)	64 Shore-D
	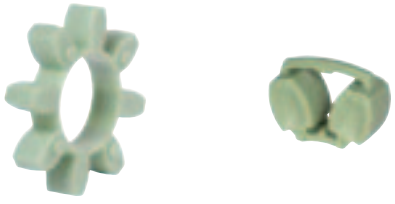 T-PUR®		
Size	14 to 180	100 to 180	14 to 90
Material	T-PUR®		Polyurethane (PUR)
Permissible temperature range Permanent temperature Short-term temperature	 -50 °C to +120 °C -50 °C to +150 °C		 -30 °C to +110 °C -30 °C to +130 °C
Properties	– significantly higher service life expectancy – very good temperature resistance – improved damping of vibrations – transmission of very high torques with low damping – recommended hub material: steel and GJS		– transmission of very high torques with low damping – suitable to shift critical speeds – resistant to hydrolysis – recommended hub material: steel and GJS

ROTEX® 14 ROTEX® 19 ROTEX® 24 - 65 ROTEX® 75 - 160 ROTEX® 180 ROTEX® DZ 100 - 160 ROTEX® DZ 180

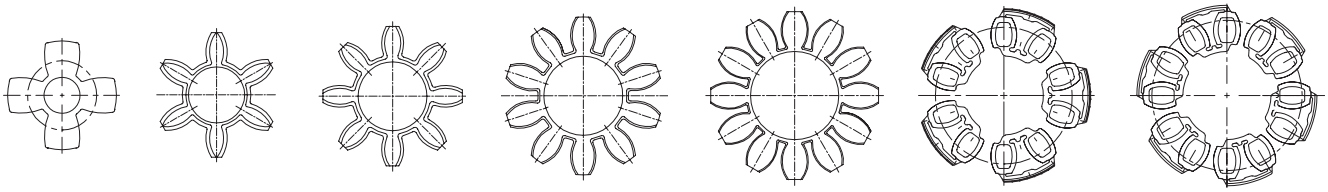

Technical data of standard spiders

92 Shore-A spider made of T-PUR® and PUR

ROTEX® size	Max. speed		Twist angle ϕ with		Torque [Nm]			Damping power PKW [W] 1)	Relative damping ψ	Resonance factor VR	Torsion spring stiffness C dyn. [Nm/rad]			
	V=35 m/s casted material	V=40 m/s steel	TKN	TK max	Rated (TKN)	Max (TK max)	Vibratory (TKW)				1.0 T_{KN}	0.75 T_{KN}	0.5 T_{KN}	0.25 T_{KN}
14	22200	25400	6,4°	10°	7,5	15	2,0	–			0,38x10³	0,31x10³	0,24x10³	0,14x10³
19	16700	19000			10	20	2,6	4,8			1,28x10³	1,05x10³	0,80x10³	0,47x10³
24	12100	13800			35	70	9,1	6,6			4,86x10³	3,98x10³	3,01x10³	1,79x10³
28	10100	11500			95	190	25	8,4			10,90x10³	8,94x10³	6,76x10³	4,01x10³
38	8300	9500			190	380	49	10,2			21,05x10³	17,26x10³	13,05x10³	7,74x10³
42	7000	8000			265	530	69	12,0			23,74x10³	19,47x10³	14,72x10³	8,73x10³
48	6350	7250			310	620	81	13,8			36,70x10³	30,09x10³	22,75x10³	13,49x10³
55	5550	6350			410	820	107	15,6	0,80	7,90	50,72x10³	41,59x10³	31,45x10³	18,64x10³
65	4950	5650	3,2°	5°	625	1250	163	18,0			97,13x10³	79,65x10³	60,22x10³	35,70x10³
75	4150	4750			1280	2560	333	21,6			113,32x10³	92,92x10³	70,26x10³	41,65x10³
90	3300	3800			2400	4800	624	30,0			190,09x10³	155,87x10³	117,86x10³	69,86x10³
100	2950	3350			3300	6600	858	36,0			253,08x10³	207,53x10³	156,91x10³	93,01x10³
110	2600	2950			4800	9600	1248	42,0			311,61x10³	255,52x10³	193,20x10³	114,52x10³
125	2300	2600			6650	13300	1729	48,0			474,86x10³	389,39x10³	294,41x10³	174,51x10³
140	2050	2350			8550	17100	2223	54,6			660,49x10³	541,60x10³	409,50x10³	242,73x10³
160	1800	2050			12800	25600	3328	75,0			890,36x10³	730,10x10³	552,03x10³	327,21x10³
180	1550	1800			18650	37300	4849	78,0			2568,56x10³	2106,22x10³	1592,51x10³	943,95x10³

98 Shore-A spider made of T-PUR® and PUR

ROTEX® size	Max. speed		Twist angle ϕ with		Torque [Nm]			Damping power PKW [W] 1)	Relative damping ψ	Resonance factor VR	Torsion spring stiffness C dyn. [Nm/rad]			
	V=35 m/s casted material	V=40 m/s steel	TKN	TK max	Rated (TKN)	Max (TK max)	Vibratory (TKW)				1.0 T_{KN}	0.75 T_{KN}	0.5 T_{KN}	0.25 T_{KN}
14	22200	25400	6,4°	10°	12,5	25	3,3	–			0,56x10³	0,46x10³	0,35x10³	0,21x10³
19	16700	19000			17	34	4,4	4,8			2,92x10³	2,39x10³	1,81x10³	1,07x10³
24	12100	13800			60	120	16	6,6			9,93x10³	8,14x10³	6,16x10³	3,65x10³
28	10100	11500			160	320	42	8,4			26,77x10³	21,95x10³	16,60x10³	9,84x10³
38	8300	9500			325	650	85	10,2			48,57x10³	39,83x10³	30,11x10³	17,85x10³
42	7000	8000			450	900	117	12,0			54,50x10³	44,69x10³	33,79x10³	20,03x10³
48	6350	7250			525	1050	137	13,8			65,29x10³	53,54x10³	40,48x10³	24,00x10³
55	5550	6350			685	1370	178	15,6	0,80	7,90	94,97x10³	77,88x10³	58,88x10³	34,90x10³
65	4950	5650	3,2°	5°	940	1880	244	18,0			129,51x10³	106,20x10³	80,30x10³	47,60x10³
75	4150	4750			1920	3840	499	21,6			197,50x10³	161,95x10³	122,45x10³	72,58x10³
90	3300	3800			3600	7200	936	30,0			312,20x10³	256,00x10³	193,56x10³	114,73x10³
100	2950	3350			4950	9900	1287	36,0			383,26x10³	314,27x10³	237,62x10³	140,85x10³
110	2600	2950			7200	14400	1872	42,0			690,06x10³	565,85x10³	427,84x10³	253,60x10³
125	2300	2600			10000	20000	2600	48,0			1343,64x10³	1101,79x10³	833,06x10³	493,79x10³
140	2050	2350			12800	25600	3328	54,6			1424,58x10³	1168,16x10³	883,24x10³	523,54x10³
160	1800	2050			19200	38400	4992	75,0			2482,23x10³	2035,43x10³	1538,98x10³	912,22x10³
180	1550	1800			28000	56000	7280	78,0			3561,45x10³	2920,40x10³	2208,10x10³	1308,84x10³

64 Spider 64 Shore-D made of T-PUR® and PUR

ROTEX® size	Max. speed		Twist angle ϕ with		Torque [Nm]			Damping power PKW [W] 1)	Relative damping ψ	Resonance factor VR	Torsion spring stiffness C dyn. [Nm/rad]			
	V=35 m/s casted material	V=40 m/s steel	TKN	TK max	Rated (TKN)	Max (TK max)	Vibratory (TKW)				1.0 T_{KN}	0.75 T_{KN}	0.5 T_{KN}	0.25 T_{KN}
14	22200	25400	4,5°	7,0°	16	32	4,2	9,0			0,76x10³	0,62x10³	0,47x10³	0,28x10³
19	16700	19000			21	42	5,5	7,2			5,35x10³	4,39x10³	3,32x10³	1,97x10³
24	12100	13800			75	150	19,5	9,9			15,11x10³	12,39x10³	9,37x10³	5,55x10³
28	10100	11500			200	400	52	12,6			27,52x10³	22,57x10³	17,06x10³	10,12x10³
38	8300	9500			405	810	105	15,3			70,15x10³	57,52x10³	43,49x10³	25,78x10³
42	7000	8000			560	1120	146	18,0			79,86x10³	65,49x10³	49,52x10³	29,35x10³
48	6350	7250			655	1310	170	20,7			95,51x10³	78,32x10³	59,22x10³	35,10x10³
55	5550	6350			825	1650	215	23,4	0,75	8,50	107,92x10³	88,50x10³	66,91x10³	39,66x10³
65	4950	5650	2,5°	3,6°	1175	2350	306	27,0			151,09x10³	123,90x10³	93,68x10³	55,53x10³
75	4150	4750			2400	4800	624	32,4			248,22x10³	203,54x10³	153,90x10³	91,22x10³
90	3300	3800			4500	9000	1170	45,0			674,52x10³	553,11x10³	418,20x10³	247,89x10³
100	2950	3350			6185	12370	1608	54,0			861,17x10³	706,16x10³	533,93x10³	316,48x10³
110	2600	2950			9000	18000	2340	63,0			1138,59x10³	933,64x10³	705,92x10³	418,43x10³
125	2300	2600			12500	25000	3250	72,0			1435,38x10³	1177,01x10³	889,93x10³	527,50x10³
140	2050	2350			16000	32000	4160	81,9			1780,73x10³	1460,20x10³	1104,05x10³	654,42x10³
160	1800	2050			24000	48000	6240	112,5			3075,80x10³	2522,16x10³	1907,00x10³	1130,36x10³
180	1550	1800			35000	70000	9100	117,0			6011,30x10³	4929,27x10³	3727,01x10³	2209,15x10³

Temperature factor St

	-50 °C	-30 °C +30 °C	+40 °C	+50 °C	+60 °C	+70 °C	+80 °C	+90 °C	+100 °C	+110 °C	+120 °C
T-PUR®	1,0	1,0	1,1	1,2	1,3	1,45	1,6	1,8	2,1	2,5	3,0
PUR	–	1,0	1,2	1,3	1,4	1,55	1,8	2,2	–	–	–

Unless explicitly specified in your order, we will supply spiders with Shore hardness 92 Sh-A T-PUR®.
For circumferential speeds exceeding V = 30 m/s, dyn. balancing is necessary For circumferential speeds exceeding V = 35 m/s only steel or nodular iron.
[1] With +30 °C

Technical data and properties of special spiders

Spider type	PA	PEEK
Material	Polyamide	Polyetheretherketone
Permissible temperature range Permanent temperature Short-term temperature	 -20 °C to +130 °C 1) -30 °C to +150 °C 1)	 up to +180 °C (ATEX to +160 °C) up to +250 °C
Properties	– small twisting angle and high torsion spring stiffness – transmission of very high torques with very low damping – good resistance to chemicals 1) – recommended hub material: steel – high restoring forces with displacements	– small twisting angle and high torsion spring stiffness – transmission of very high torques with very low damping – highly temperature-resistant, resistant to hydrolysis – good resistance to chemicals – recommended hub material: steel – high restoring forces with displacements

[1] different properties depending on compound

Torques			
	PA, PEEK		
	TKN [Nm]	TK max [Nm]	TKW [Nm]
14	22	44	5,5
19	30	60	8,0
24	105	210	27,5
28	280	560	73
38	565	1130	147
42	785	1570	204
48	915	1830	238
55	1200	2400	312
65	1645	3290	427
75	2560	5130	667
90	6300	12600	1640
100	8650	17300	2250
110	10500	21000	2730
125	13000	26000	3380

Temperature factor St												
	-50 °C	-30 °C +30 °C	+40 °C	+50 °C	+60 °C	+70 °C	+80 °C	+90 °C	+100 °C	+110 °C	+120 °C	+180 °C
PA	–	1,0	1,15	1,25	1,4	1,6	1,9	2,3	3,0	–	–	–
PEEK	–	1,0	1,0	1,0	1,0	1,0	1,0	1,0	1,0	1,0	1,0	1,0

Installation of spider

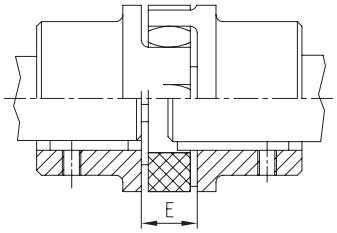

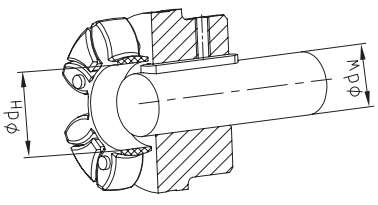

Shaft ØdW with feather key (acc. to DIN 6885 sheet 1) protuding into the spider ØdH

Mounting dimension																	
ROTEX® Size	14	19	24	28	38	42	48	55	65	75	90	100	110	125	140	160	180
Distance dimension E	13	16	18	20	24	26	28	30	35	40	45	50	55	60	65	75	85
Dimension dH	10	18	27	30	38	46	51	60	68	80	100	113	127	147	165	190	220
Dimension dW 2)	7	12	20	22	28	36	40	48	55	65	80	95	100	120	135	160	185

[2] 2) If the shaft diameter is smaller than or equal to dimension d_H, one shaft end or both shaft ends may protude with the feather keyway in the spider.

Selection of standard IEC motors

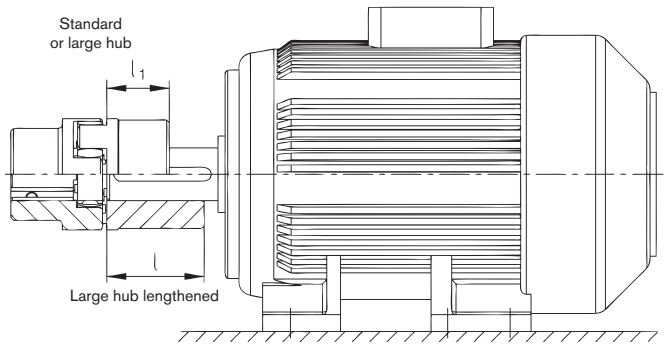

ROTEX® couplings for standard IEC motors, protection class IP 54/IP 55 (spider 92 Shore A)

A. C. motor 50 Hz			Motor output n= 3000 RPM 2 poles		ROTEX® coupling size	Motor output n= 1500 RPM 4 poles		ROTEX® coupling size	Motor output n= 1000 RPM 6 poles		ROTEX® coupling size	Motor output n= 750 RPM 8 poles		ROTEX® coupling size
Size	Shaft end dxl [mm]													
	2-pole	4, 6, 8 pole	Output P [kW]	Torque T [Nm]		Output P [kW]	Torque T [Nm]		Output P [kW]	Torque T [Nm]		Output P [kW]	Torque T [Nm]	
56	9 x 20		0,09	0,32	9 [1]	0,06	0,43	9 [1]	0,037	0,43	9 [1]			
			0,12	0,41		0,09	0,64		0,045	0,52				
63	11 x 23		0,18	0,62		0,12	0,88		0,06	0,7				
			0,25	0,86	14	0,18	1,3	14	0,09	1,1	14			
71	14 x 30		0,37	1,3		0,25	1,8		0,18	2		0,09	1,4	14
			0,55	1,9		0,37	2,5		0,25	2,8		0,12	1,8	
80	19 x 40		0,75	2,5		0,55	3,7		0,37	3,9		0,18	2,5	
			1,1	3,7	19	0,75	5,1	19	0,55	5,8	19	0,25	3,5	19
90S	24 x 50		1,5	5		1,1	7,5		0,75	8		0,37	5,3	
90L			2,2	7,4		1,5	10		1,1	12		0,55	7,9	
100L	28 x 60		3	9,8	24	2,2	15	24	1,5	15	24	0,75	11	24
						3	20					1,1	16	
112M			4	13		4	27		2,2	22		1,5	21	
132S	38 x 80		5,5	18		5,5	36		3	30		2,2	30	
			7,5	25	28			28			28			28
132M						7,5	49		4	40		3	40	
									5,5	55				
160M	42 x 110		11	36		11	72		7,5	75		4	54	
			15	49	38			38			38	5,5	74	38
160L			18,5	60		15	98		11	109		7,5	100	
180M	48 x 110		22	71		18,5	121							
180L						22	144	42	15	148	42	11	145	42
200L	55 x 110		30	97	42	30	196		18,5	181		15	198	
			37	120					22	215				
225S	55 x 110	60 x 140				37	240	48				18,5	244	48
225M			45	145		45	292	55	30	293	55	22	290	55
250M	60 x 140	65 x 140	55	177	48	55	356		37	361	65 [2]	30	392	65
280S		75 x 140	75	241	55	75	484	65 [2]	45	438		37	483	65 [2]
280M			90	289		90	581		55	535		45	587	75
315S		80 x 170	110	353		110	707	75	75	727	75	55	712	
315M	65 x 140		132	423	65	132	849		90	873		75	971	
			160	513		160	1030		110	1070		90	1170	90
315L			200	641		200	1290	90	132	1280	90	110	1420	
		85 x 170			75				160	1550		132	1710	
315			250	802		250	1600		200	1930		160	2070	
			315	1010		315	2020		250	2410	100	200	2580	100
			355	1140		355	2280	100						
355	75 x 140	95 x 170	400	1280	90	400	2570		315	3040	110	250	3220	110
			500	1600		500	3210	110	400	3850	125	315	4060	125
			560	1790		560	3580	125	450	4330		355	4570	
400	80 x 170	110 x 210	630	2020		630	4030		500	4810		400	5150	140
			710	2270	100	710	4540		560	5390	140	450	5790	
			800	2560		800	5120	140	630	6060		500	6420	
450	90 x 170	120 x 210	900	2880	110	900	5760		710	6830	160	560	7190	160
			1000	3200		1000	6400	160	800	7690		630	8090	

The coupling selection is based on an ambient temperature up to 30 °C. For the selection there is a minimum safety factor of 2 of the max. coupling torque (TKmax.). A detailed selection is possible according to catalogue, page 10 et seqq. Drives with periodical torque curves must be selected according to DIN 740 part 2. If requested, KTR will perform the selection. Torque T = rated torque according to Siemens catalogue M 11 · 1994/95..

[1] Dimensions see series ROTEX® GS

[2] Motor hub made of steel see page 36

Cylindrical bores and spline bores

Stock programme of cylindrical finish bores [mm] H7 feather keyway to DIN 6885 sheet 1 [JS9] and thread for setscrews

ROTEX® Size/material		Unbored	Ø6	Ø8	Ø9	Ø10	Ø11	Ø12	Ø14	Ø15	Ø16	Ø17	Ø18	Ø19	Ø20	Ø22	Ø24	Ø25	Ø28	Ø30	Ø32	Ø35	Ø38	Ø40	Ø42	Ø45	Ø48	Ø50	Ø55	Ø60	Ø65	Ø70	Ø75	Ø80	Ø85	Ø90	Ø100
14	Sint	●		●		●	●	●	●																												
	Al-H	●	●	●	●	●	●	●	●	●	●																										
19	Sint	●							●		●			●	●	●	●																				
	AL-D	●		●		●	●	●	●	●	●	●	●	●	●		●																				
	St	●		●		●	●	●	●	●	●	●	●	●	●	●	●	●																				
24	Al-D	●				●	●	●	●	●	●	●	●	●	●	●	●	●	●																		
	St	●				●		●	●	●	●	●	●	●	●	●	●	●	●	●	●																
28	Al-D	●							●		●		●	●	●	●	●	●	●	●	●	●	●														
	St	●							●	●	●		●	●	●	●	●	●	●	●	●	●	●	●														
38	GJL	●									●		●	●	●	●	●	●	●	●	●	●	●	●	●	●											
	St	●													●		●	●	●	●	●	●	●	●	●		●											
42	GJL	●													●	●	●	●	●	●	●	●	●	●	●	●	●	●	●								
	St	●																●	●	●	●	●	●	●	●	●	●	●	●									
48	GJL	●															●	●	●	●	●	●	●	●	●	●	●	●	●	●							
	St	●																		●	●	●	●	●	●	●	●	●	●	●								
55	GJL	●																●		●	●	●	●	●	●	●	●	●	●	●	●	●					
	St	●																			●	●	●	●		●	●	●	●	●	●							
65	GJL	●																			●	●	●	●	●	●	●	●	●	●	●	●					
	St	●																						●			●	●	●	●	●	●	●	●				
75	GJL	●																				●		●		●	●	●	●	●	●	●	●				
	St	●																										●	●	●	●		●	●	●	●	
90	GJL	●																								●		●	●	●	●	●	●	●	●		
	St	●																												●	●	●	●	●		●	●

Basic programme SAE involute spline

Spline code	Size	Pitch circle	Pitch	No. of teeth	Angle	Spline code	Size	Pitch circle	Pitch	No. of teeth	Angle
PH-S	5/8"	14,28	16/32	9	30°	**PS-S**	1 1/2"	35,98	12/24	17	30°
PI-S	3/4"	17,46	16/32	11	30°	**PD-S**	1 1/2"	36,51	16/32	23	30°
PB-S	7/8"	20,63	16/32	13	30°	**PE-S**	1 3/4"	42,86	16/32	27	30°
PB-BS	1"	23,81	16/32	15	30°	**PK**	1 3/4"	41,275	8/16	13	30°
PJ	1 1/8"	26,98	16/32	17	30°	**PT-C** [1]	2"	47,625	8/16	15	30°
PC-S	1 1/4"	29,63	12/24	14	30°	**PQ-C** [1]	2 1/4"	53,975	8/16	17	30°
PA-S	1 3/8"	33,33	16/32	21	30°						

Basic programme spline bores to DIN 5482

Size	Pitch circle	Pitch	No. of teeth	Profile correction	Size	Pitch circle	Pitch	No. of teeth	Profile correction
A 17 x 14	14,40	1,6	9	+0,600 [2]	**A 35 x 31**	31,50	1,75	18	+0,676
A 20 x 17	19,20	1,6	12	-0,2	**A 40 x 36**	38,00	1,9	20	+0,049
A 25 x 22	22,40	1,6	14	+0,550	**A 45 x 41**	44,00	2	22	+0,181
A 28 x 25	26,25	1,75	15	+0,302	**A 50 x 45**	48,00	2	24	+0,181
A 30 x 27	28,00	1,75	16	+0,327					

Basic programme spline bores to DIN 5480

Spline code	Pitch circle	Pitch	No. of teeth	Spline code	Pitch circle	Pitch	No. of teeth
20 x 1 x 18 x 7H	18,0	1	18	**40 x 2 x 18 x 8H**	36,0	2	18
20 x 1,25 x 14 x 7H	17,5	1,25	14	**45 x 2 x 21 x 7H**	41,0	2	21
25 x 1,25 x 18 x 7H	22,5	1,25	18	**48 x 2 x 22 x 9H**	44,0	2	22
28 x 1,25 x 21 x 7H	26,25	1,25	21	**50 x 2 x 24 x 8H**	48,0	2	24
30 x 2 x 14 x 7H	26,0	2	14	**60 x 2 x 28 x 8H**	56,0	2	28
32 x 2 x 14 x 8H	28,0	2	14	**75 x 3 x 24 x 7H**	72,0	3	24
35 x 2 x 16 x 8H	32,0	2	16	**80 x 3 x 25 x 8H**	75,0	3	25

Basic programme spline bores acc. to DIN 9611 (p.t.o. shaft spline)

Size	Width of keyway	No. of teeth	Tip circle	Root circle
1 3/8"	8,69	6	34,93	29,65
1 3/8"	–	21	34,95	34,80 [3]
1 3/4"	11,07	6	44,45	37,74
1 3/4"	–	20	45,20	40,20

Spline clamping hubs are often adapted to the shafts of hydraulic pumps/hydraulic motors. Please ask us about the corresponding hub length of the spline code!
[1] For clamping hubs only, for plug-in hubs use code PT or PQ.
[2] Profile correction different from DIN
[3] Similar to code PA-S

Inch bores and taper bores

Stock programme inch bores

ROTEX® Size					19	24	28	38	42	48	55	65	75	90
Material					St	St	St	GJL	GJL	GJL	GJL	GJL	GJL	GJL
Code	Ød	Ød inch	$b^{+0,05}$	$t_2{}^{+0,2}$										
Tb	$9,5^{+0,03}$	3/8	3,17	11,1										
DNB	$11,11^{M7}$	7/16	2,4	12,5										
T	$12,69^{H7}$	1/2	4,75	14,6										
Ta	$12,7^{+0,03}$	1/2	3,17	14,3	●	●								
DNC	$13,45^{H7}$	17/32	3,17	14,9										
Do	$14,29^{+0,03}$	9/16	3,17	15,6										
E	$15,87^{+0,03}$	5/8	3,17	17,5										
Es	$15,88^{+0,03}$	5/8	4,00	17,7	●	●	●							
Ed	$15,87^{+0,03}$	5/8	4,75	18,1	●	●								
DNH	$17,465^{H7}$	11/16	4,75	19,6										
Ad	$19,02^{+0,03}$	3/4	3,17	20,7										
A	$19,05^{+0,03}$	3/4	4,78	21,3	●	●	●	●						
Gs	$22,22^{+0,03}$	7/8	4,78	24,4	●									
G	$22,22^{+0,03}$	7/8	4,75	24,7	●	●	●	●	●					
F	$22,22^{+0,03}$	7/8	6,38	25,2		●	●	●	●	●				
Gd	$22,225^{M7}$	7/8	4,76	24,7		●								
Gf	$23,80^{+0,03}$	1 5/16	6,35	26,8										
Bs	$25,38^{+0,03}$	1	6,37	28,3		●	●	●	●					
H	$25,40^{+0,03}$	1	4,78	27,8										
Hs	$25,40^{+0,03}$	1	6,35	28,7			●							
R	$26,95^{+0,03}$	1 1/16	4,78	29,3										
Sa	$28,575^{M7}$	1 1/8	6,35	31,7		●	●							
Sb	28,58+0,03	1 1/8	6,35	31,5			●	●						
Sd	$28,58^{+0,03}$	1 1/8	7,93	32,1										
Js	$31,75^{+0,03}$	1 1/4	6,35	34,6										
K	$31,75^{K7}$	1 1/4	7,93	35,5			●	●	●	●	●	●		
Ma	$34,925^{M7}$	1 3/8	7,93	38,7			●							
RH1	$34,93^{M7}$	1 3/8	9,55	37,8										
Cb	$36,50^{+0,03}$	1 7/16	9,55	40,9										
Ca	$38,07^{+0,03}$	1 1/2	7,93	42,0										
C	$38,07^{+0,03}$	1 1/2	9,55	42,5			●	●	●	●	●	●	●	
Nb	$41,275^{M7}$	1 5/8	9,55	45,8				●	●					
Ls	$44,42^{+0,03}$	1 3/4	9,55	48,8										
L	$44,45^{K7}$	1 3/4	11,11	49,4						●	●			
Lu	$47,625^{M7}$	1 7/8	12,7	53,5					●					
Da	$49,20^{+0,03}$	1 15/16	12,7	55,0										
Ds	$50,77^{+0,03}$	2	12,7	56,4										
D	$50,80^{+0,03}$	2	12,7	55,1										
Pa	$53,975^{M7}$	2 1/8	12,7	60,0								●		
U	$57,10^{+0,03}$	2 1/4	12,7	62,9										
Ub	$60,325^{M7}$	2 3/8	15,875	67,6										
Wd	$85,725^{M7}$	3 3/8	22,225	95,8										
Wf	$92,075^{M7}$	3 5/8	22,225	101,9										

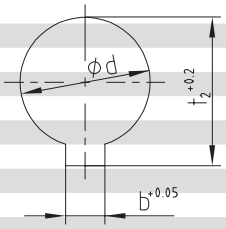

Basic programme taper 1:8

Code	$d^{+0,05}$	(d_2)	b^{JS9}	$t_2{}^{+0,1}$	l_K
N/ 1	9,7	7,575	$2,4^{+0,05}$	10,85	17,0
N/ 1c	11,6	9,5375	3^{JS9}	12,90	16,5
N/ 1e	13,0	10,375	$2,4^{+0,05}$	13,80	21,0
N/ 1d	14,0	11,813	3^{JS9}	15,50	17,5
N/ 1b	14,3	11,8625	$3,2^{+0,05}$	5,65	19,5
N/ 2	17,287	14,287	$3,2^{+0,05}$	18,24	24,0
N/ 2a	17,287	14,287	4^{JS9}	18,94	24,0
N/ 2b	17,287	14,287	3^{JS9}	18,34	24,0
N/ 3	22,002	18,502	4^{JS9}	23,40	28,0
N/ 4	25,463	20,963	$4,78^{+0,05}$	27,83	36,0
N/ 4b	25,463	20,963	5^{JS9}	28,23	36,0
N/ 4a	27,0	22,9375	$4,78^{+0,05}$	28,80	32,5
N/ 4g	28,45	23,6375	6^{JS9}	29,32	38,5
N/ 5	33,176	27,676	$6,38^{+0,05}$	35,39	44,0
N/ 5a	33,176	27,676	7^{JS9}	35,39	44,0

For code N/6 and N/6a keywith parallel to the taper.

Basic programme taper 1:10

Code	$d^{+0,05}$	(d_2)	b^{JS9}	$t_2{}^{+0,1}$	l_K
CX	19,95	16,75	5^{JS9}	22,08	32
DX	24,95	20,45	6^{JS9}	26,68	45
EX	29,75	24,75	8^{JS9}	31,88	50

Basic programme taper 1:5

Code	$d^{+0,05}$	(d_2)	b^{JS9}	$t_2{}^{+0,1}$	l_K
A-10	9,85	7,55	2^{JS9}	1,0	11,5
B-17	16,85	13,15	3^{JS9}	1,8	18,5
C-20	19,85	15,55	4^{JS9}	2,2	21,5
Cs-22	21,95	17,65	3^{JS9}	1,8	21,5
D-25	24,85	19,55	5^{JS9}	2,9	26,5
E-30	29,85	23,55	6^{JS9}	2,6	31,5
F-35	34,85	27,55	6^{JS9}	2,6	36,5
G-40	39,85	32,85	6^{JS9}	2,6	35,0

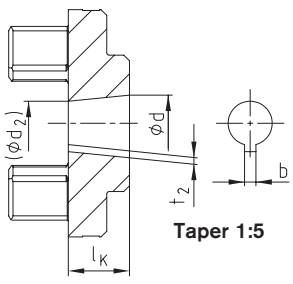

Taper 1:5

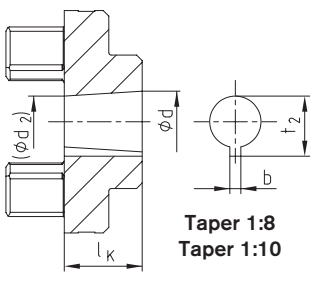

Taper 1:8
Taper 1:10

Material cast + powder metal

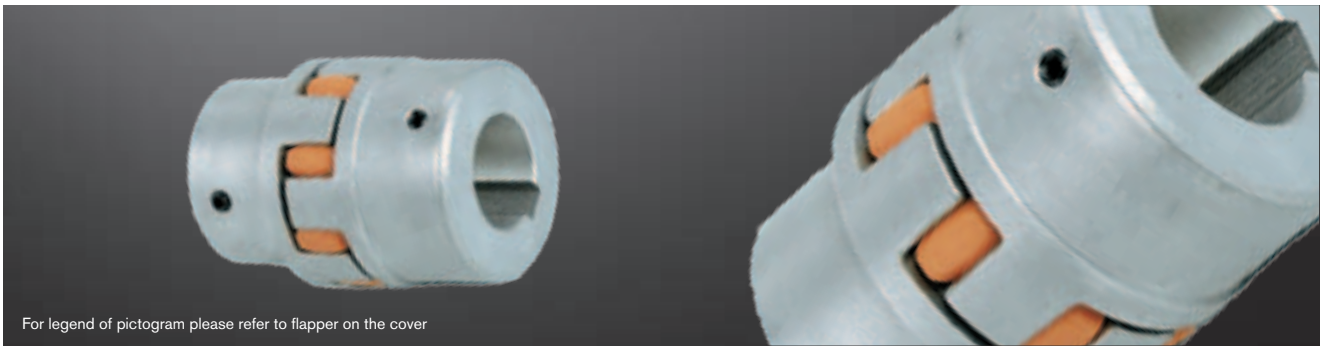

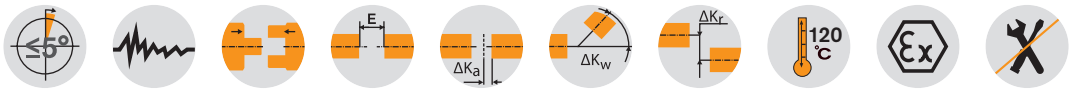

ROTEX® Sintered steel (Sint)

Size	Compo-nent	Spider (part 2) 1) Rated torque [Nm]		Finish bore d	Dimensions [mm] General									Thread for setscrew		
		92 Sh-A	98 Sh-A		L	l_1; l_2	E	b	s	D_H	d_H	D	N	G	t	T_A [Nm]
14	1a	7,5	12,5	ungeb.: 8, 10, 11, 12, 14, 15, 16	35	11	13	10	1,5	30	10	30	M4	5	1,5	1,5
19	1a	10	17	ungeb., 14, 16, 19, 20, 22, 24	66	25	16	12	2,0	40	18	40	M5	10	2	2
24	1a	35	60	ungeb., Ø 24	78	30	18	14	2,0	56	27	40	M5	10	2	2

ROTEX® Aluminium diecast (Al-D)

Size	Compo-nent	Spider (part 2) 1) Rated torque [Nm]			Finish bore d (min-max)	Dimensions [mm] General										Thread for setscrew		
		92 Sh-A	98 Sh-A	64 Sh-D		L	l_1; l_2	E	b	s	D_H	D_Z	d_H	D; D_1	N	G	t	T_A [Nm]
19	1	10	17	—	6-19	66	25	16	12	2	41	—	18	32	20	M5	10	2
	1a				19-24									41				
24	1	35	60	—	9-24	78	30	18	14	2	56	—	27	40	24	M5	10	2
	1a				22-28									56				
28	1	95	160	—	10-28	90	35	20	15	2,5	66	—	30	48	28	M8	15	10
	1a				28-38									66				

ROTEX® Cast iron (GJL)

38	1	190	325	405	12-40	114	45	24	18	3	80	—	38	66	37	M8	15	10
	1a				38-48									78				
	1b				12-48	164	70								62			
42	1	265	450	560	14-45	126	50	26	20	3	95	—	46	75	40	M8	20	10
	1a				42-55									94				
	1b				14-55	176	75								65			
48	1	310	525	655	15-52	140	56	28	21	3,5	105	—	51	85	45	M8	20	10
	1a				48-62									104				
	1b				15-62	188	80								69			
55	1	410	685	825	20-60	160	65	30	22	4	120	—	60	98	52	M10	20	17
	1a				55-74									118				
65	1	625	940	1175	22-70	185	75	35	26	4,5	135	—	68	115	61	M10	20	17
75	1	1280	1920	2400	30-80	210	85	40	30	5	160	—	80	135	69	M10	25	17
90	1	2400	3600	4500	40-97	245	100	45	34	5,5	200	218	100	160	81	M12	30	40

ROTEX® Nodular iron (GJS)

100	1	3300	4950	6185	50-115	270	110	50	38	6	225	246	113	180	89	M12	30	40
110	1	4800	7200	9000	60-125	295	120	55	42	6,5	255	276	127	200	96	M16	35	80
125	1	6650	10000	12500	60-145	340	140	60	46	7	290	315	147	230	112	M16	40	80
140	1	8550	12800	16000	60-160	375	155	65	50	7,5	320	345	165	255	124	M20	45	140
160	1	12800	19200	24000	80-185	425	175	75	57	9	370	400	190	290	140	M20	50	140
180	1	18650	28000	35000	85-200	475	195	85	64	10,5	420	450	220	325	156	M20	50	140

■ = If no material is specified in the order, it is stipulated in the calculation/order.
[1] Maximum torque of the coupling $T_{Kmax.}$ = rated torque of the coupling $T_{K\ rated}$ x 2. For selection see page 10 et seqq.

Ordering example:

ROTEX® 38	GJL	92 Sh-A	1a	Ø 45	1	Ø 25
Coupling size	Material	Spider hardness	Component	Finish bore	Component	Finish bore

Components

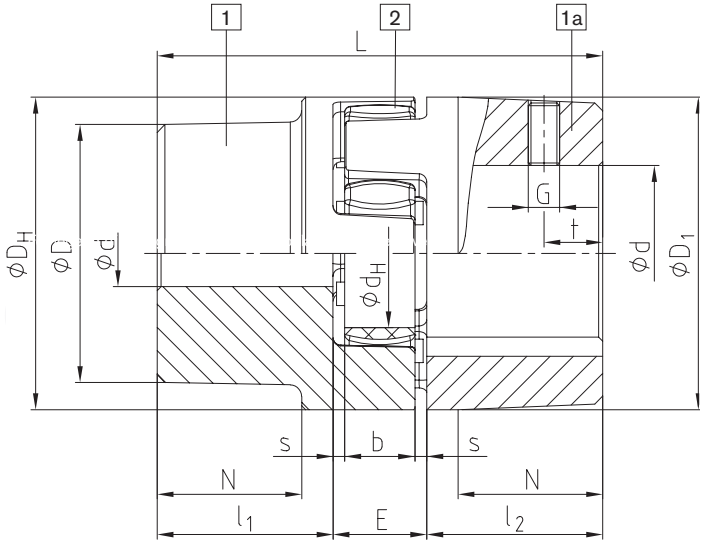

AL-D (thread opposite to the keyway)

Spider
Hardness 92Sh-A, 98Sh-A, 64Sh-D
Standard from size 14 - 180

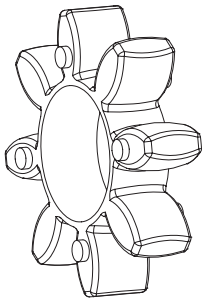

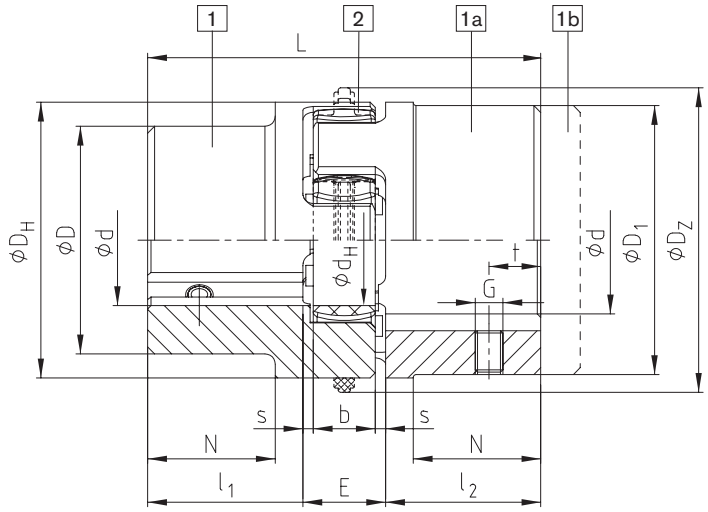

GJL / GJS (thread on the keyway)

Elements DZ
Hardness 92Sh-A and 98Sh-A size 100 - 180

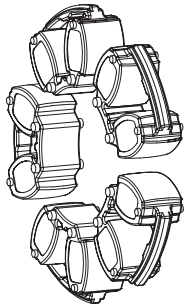

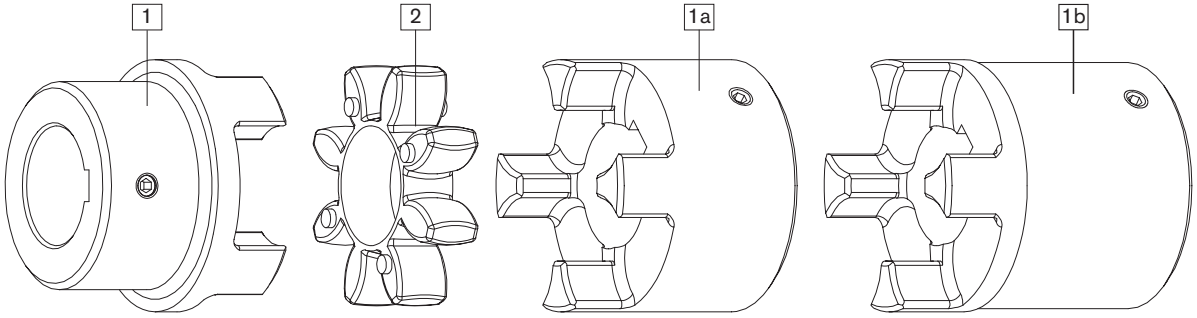

Standard hub | Spider | Large hub | Large hub lengthened

Material steel / UL / marine

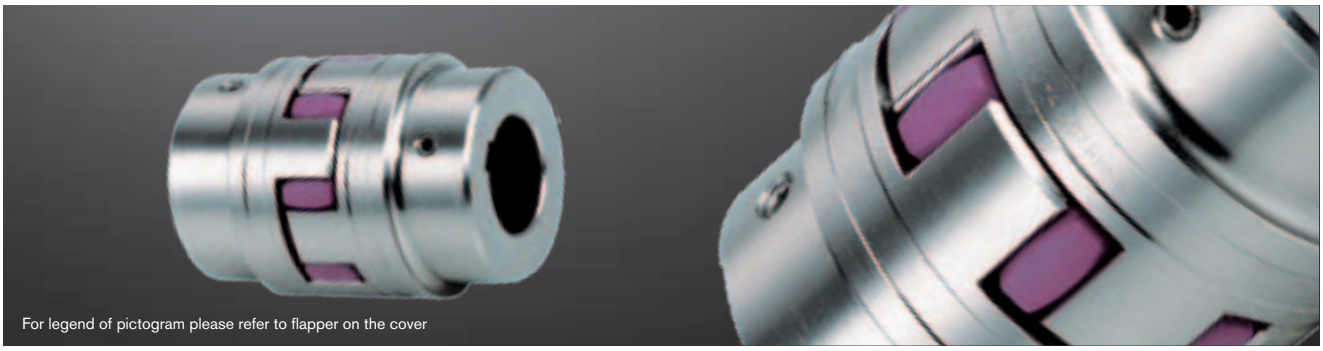

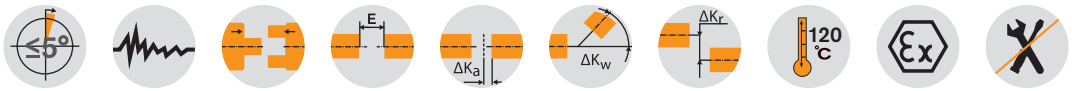

ROTEX® Steel (St)

Size	Compo-nent	Spider (part 2) rated torque [Nm]			Dimensions [mm]												
					Finish bore	General									Thread for setscrew		
		92 Sh-A	98 Sh-A	64 Sh-D	d (min-max)	L	l_1; l_2	E	b	s	D_H	d_H	D	N	G	t	T_A [Nm]
14	1a	7,5	12,5	16	0-16	35	11	13	10	1,5	30	10	30	—	M4	5	1,5
	1b					50	18,5										
19	1a	10	17	21	0-25	66	25	16	12	2	40	18	40	—	M5	10	2
	1b					90	37										
24	1a	35	60	75	0-35	78	30	18	14	2	55	27	55	—	M5	10	2
	1b					118	50										
28	1a	95	160	200	0-40	90	35	20	15	2,5	65	30	65	—	M8	15	10
	1b					140	60										
38	1	190	325	405	0-48	114	45	24	18	3	80	38	70	27	M8	15	10
	1b					164	70						80	—			
42	1	265	450	560	0-55	126	50	26	20	3	95	46	85	28	M8	20	10
	1b					176	75						95	—			
48	1	310	525	655	0-62	140	56	28	21	3,5	105	51	95	32	M8	20	10
	1b					188	80						105	—			
55	1	410	685	825	0-74	160	65	30	22	4	120	60	110	37	M10	20	17
	1b					210	90						120	—			
65	1	625	940	1175	0-80	185	75	35	26	4,5	135	68	115	47	M10	20	17
	1b					235	100						135	—			
75	1	1280	1920	2400	0-95	210	85	40	30	5	160	80	135	53	M10	25	17
	1b					260	110						160	—			
90	1	2400	3600	4500	0-110	245	100	45	34	5,5	200	100	160	62	M12	30	40
	1b					295	125						200	—			
100	1	3300	4950	6185	0-115	270	110	50	38	6	225	113	150	89	M12	30	40
110	1	4800	7200	9000	0-125	295	120	55	42	6,5	255	127	200	96	M16	35	80
125	1	6650	10000	12500	60-145	340	140	60	46	7	290	147	230	112	M16	40	80
140	1	8550	12800	16000	60-160	375	155	65	50	7,5	320	165	255	124	M20	45	140
160	1	12800	19200	24000	80-185	425	175	75	57	9	370	190	290	140	M20	50	140
180	1	18650	28000	35000	85-200	475	195	85	64	10,5	420	220	325	156	M20	50	140

■ = If no material is specified in the order, it is stipulated in the calculation/order.
[1] Maximum torque of coupling $T_{Kmax.}$ = rated torque of coupling $T_{K\ rated}$ x 2. For selection see page 10 et seqq.

Ordering example:

ROTEX® 38	St	92 Sh-A	1 – Ø 45		1 – Ø 25	
Coupling size	Material	Spider hardness	Component	Finish bore	Component	Finish bore

Components

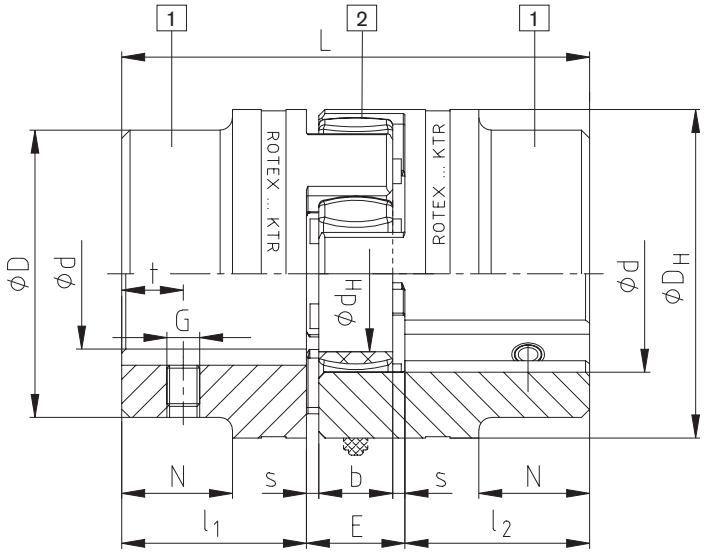

Steel (thread on the keyway)

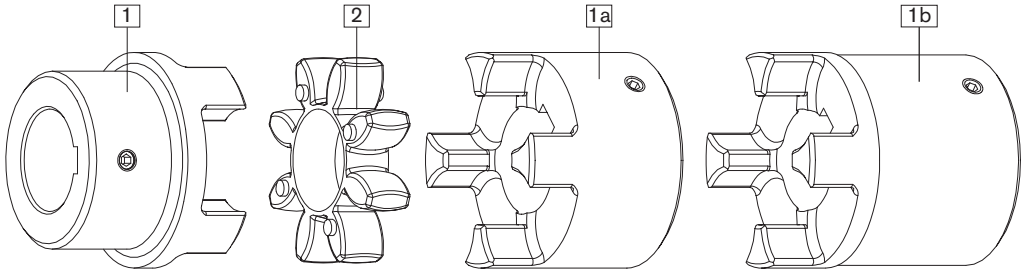

Standard hub | Spider | Large hub | Large hub lengthened

Marine programme:
Hub materials S355J2+N and 42CrMo4+QT acc. to DIN EN10204-3.1+3.2 size 75-180 available from stock.

DNV·GL ABS Lloyd's Register

UL LISTED

Use in fire extinguisher pumps

ROTEX® couplings comply with the specifications of NFPA 20 standard for the installation of stationary pumps for fire protection and on completion of the necessary permanent tests they also comply with the specifications of UL 448A, flexible couplings and connection shafts for stationary fire extinguisher pumps.

Sizes available:

ROTEX® UL-Listed								
Size	Component	Material	Spider (part 2) Rated torque [Nm] 92 Sh-A	Dimensions [mm] Finish bore d (min-max)	L	l_1; l_2	E	D_H
42	1	St	265	18-55	126	50	26	95
55	1	St	410	24-74	160	65	30	120
65	1	St	625	24-80	185	75	35	135
75	1	St	1280	24-95	210	85	40	160
90	1	St	2400	30-110	245	100	45	200

* For complete dimensions see table on page 36

ROTEX® Standard
Flexible jaw couplings

Material aluminium

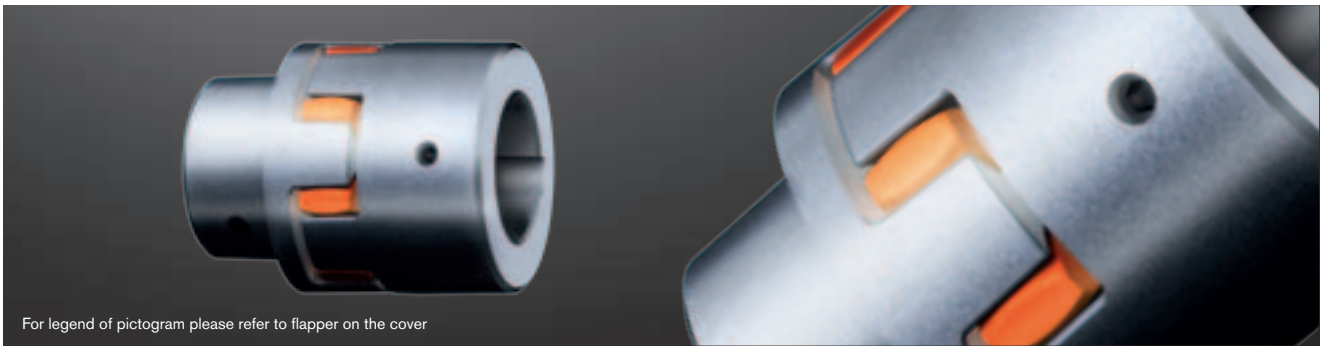

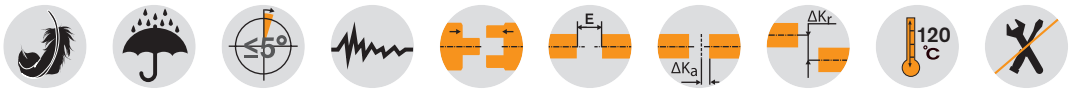

Components

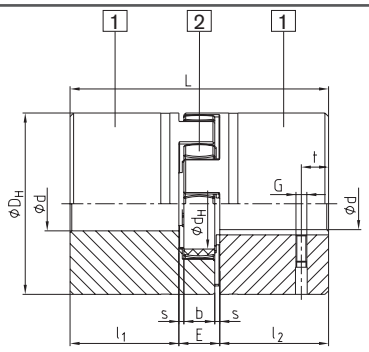

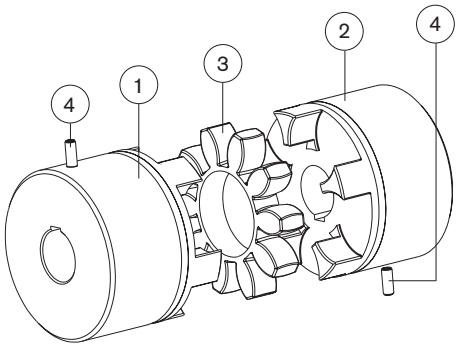

ROTEX® Aluminium (AL-H)															
Size	Compo-nent	Spider (part 2) Rated torque [Nm]		Dimensions [mm]											
				Finish bore	General								Thread for setscrew		
		92 Sh-A GS	98 Sh-A GS	d (max)	L	l_1; l_2	E	b	s	D_H	d_H	N	G	t	T_A [Nm]
5	1	0,5	0,9	6	15	5	5	4	0,5	10	-	M2	2,5	-	2
7	1	1,2	2,0	7	22	7	8	6	1,0	14	-	M3	3,5	0,6	2
9	1	3,0	5,0	11	30	10	10	8	1,0	20	7,2	M4	5	1,5	10
12	1	5,0	9,0	12	34	11	12	10	1,0	25	8,5	M4	5	1,5	10
14	1	7,5	12,5	16	35	11	13	10	1,5	30	10,5	M4	5	1,5	10
19	1	10	17	24	66	25	16	12	2,0	40	18	M5	10	2	10
24	1	35	60	28	78	30	18	14	2,0	55	27	M5	10	2	17
28	1	95	160	38	90	35	20	15	2,5	65	30	M8	15	10	17
38	1	190	325	45	114	45	24	18	3,0	80	38	M8	15	10	17
42	1	265	450	55	126	50	26	20	3,0	95	46	M8	20	10	40
48	1	310	525	62	140	56	28	21	3,0	105	51	M8	20	10	40

As a standard the coupling is provided with a ROTEX®-GS spider (ROTEX® standard spider is available on request, too)

Ordering example:

ROTEX® 19	Al-H	92 Sh-A GS	1 – Ø 15		1 – Ø 20	
Coupling size	Material	Spider hardness	Component	Finish bore	Component	Finish bore

Material steel with CDP coating, stainless steel

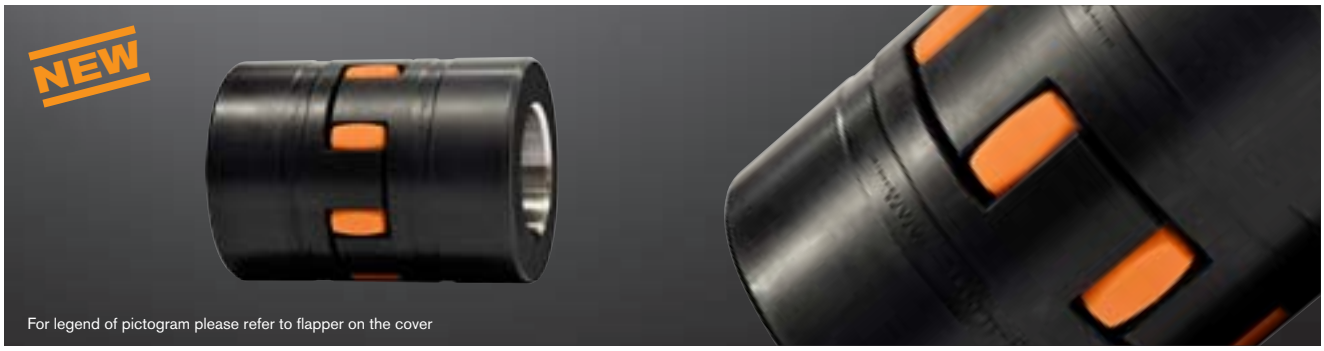

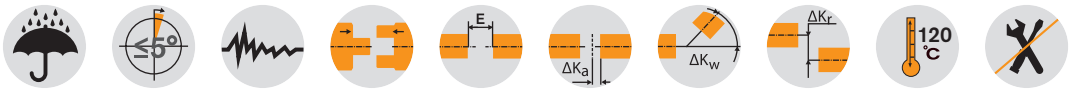

Components

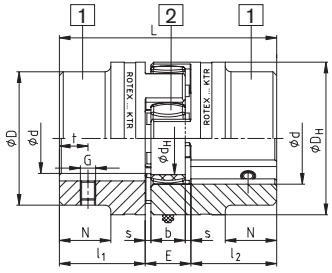

Steel (thread on the keyway)

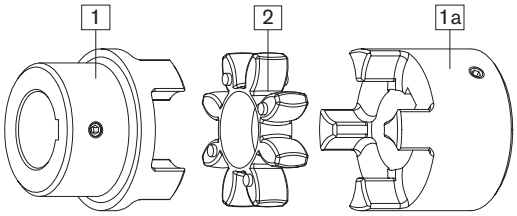

Standard hub Spider Large hub

ROTEX® with CDP coating[1]																		
Size	Compo-nent	Spider (part 2) Rated torque [Nm]			Dimensions [mm]													
					Finish bore	General									Thread for setscrew			
		92 Sh-A	98 Sh-A	64 Sh-D	d (min-max)	L	l_1; l_2	E	b	s	D_H	d_H	D	N	G	t	T_A [Nm]	
19	1a	10	17	21	0-25	66	25	16	12	2	40	18	40	–	M5	10	2	
24	1a	35	60	75	0-35	78	30	18	14	2	55	27	55	–	M5	10	2	
28	1a	95	160	200	0-40	90	35	20	15	2,5	65	30	65	–	M8	15	10	
38	1a	190	325	405	0-48	114	45	24	18	3	80	38	70	27	M8	15	10	
42	1a	265	450	560	0-55	126	50	26	20	3	95	46	85	28	M8	20	10	
48	1a	310	525	655	0-62	140	56	28	21	3,5	105	51	95	32	M8	20	10	
55	1a	410	685	825	0-74	160	65	30	22	4	120	60	110	37	M10	20	17	
65	1a	625	940	1175	0-80	185	75	35	26	4,5	135	68	115	47	M10	20	17	
75	1a	1280	1920	2400	0-95	210	85	40	30	5	160	80	135	53	M10	25	17	
90	1a	2400	3600	4500	0-110	245	100	45	34	5,5	200	100	160	62	M12	25	40	
100	1	3300	4950	6185	0-115	270	110	50	38	6	225	113	150	89	M12	30	40	
110	1	4800	7200	9000	0-125	295	120	55	42	6,5	255	127	200	96	M16	35	80	
125	1	6650	10000	12500	60-145	340	140	60	46	7	290	147	230	112	M16	40	80	

[1] Corrosion protection class to DIN EN ISO 12944: Min. C4, heavy-long

ROTEX® Stainless steel																	
Size	Material	Spider (part 2) Rated torque [Nm]			Dimensions [mm]												
					Finish bore d (min - max)	General									Thread for setscrew		
		92 Sh-A	98 Sh-A	64 Sh-D		L	l_1; l_2	E	b	s	D_H	d_H	D	N	G	t	T_A [Nm]
19	1.4305	10	17	21	0-25	66	25	16	12	2	40	18	40	-	M5	10	2
24	1.4571	35	60	75	0-35	78	30	18	14	2	55	27	55	-	M5	10	2
28	1.4305	95	160	200	0-40	90	35	20	15	2,5	65	30	65	-	M8	15	10
38	1.4571	190	325	405	0-48	114	45	24	18	3	80	38	70	27	M8	15	10
42	1.4305	265	450	560	0-55	126	50	26	20	3	95	46	85	28	M8	20	10
48	1.4571	310	525	655	0-62	140	56	28	21	3,5	105	51	95	32	M8	20	10

Ordering example:

ROTEX® 38	St+KTL	92 Sh-A	1 – Ø 45		1 – Ø 25	
Coupling size	Material	Spider hardness	Component	Finish bore	Component	Finish bore

Taper clamping bush

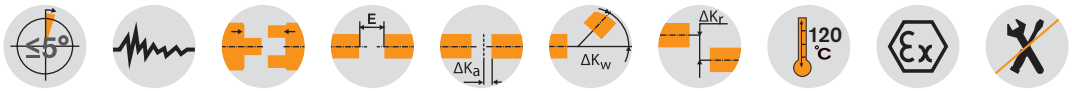

Components

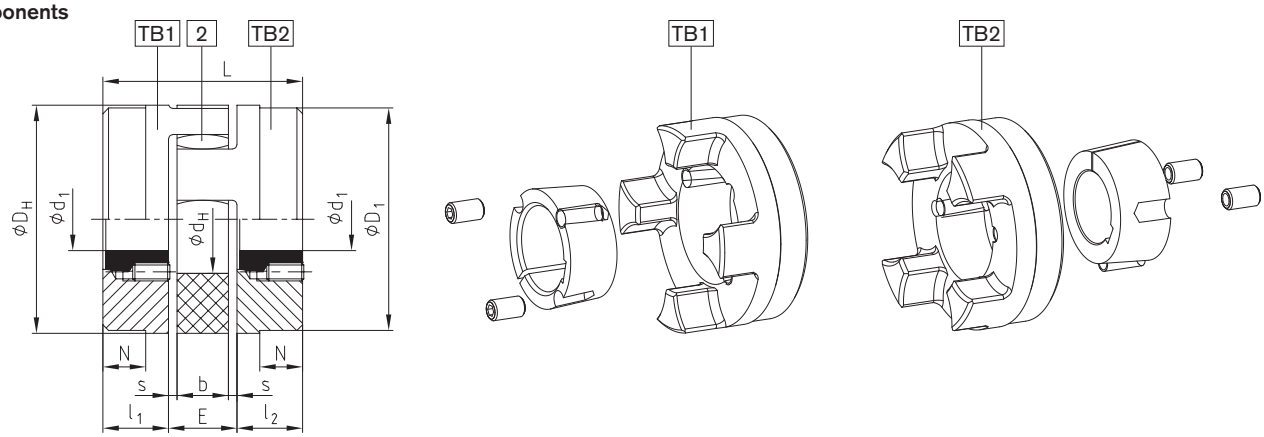

ROTEX® Shaft coupling for taper clamping bush															
Size	Taper clamping bush	Dimensions [mm]									Fastening screw for taper bush				
		$l_1;l_2$	E	s	b	L	N	D_H	D_1	d_H	Size [Inch]1)	Length [mm]	No. z	T_A [Nm]	
24	1008	22	18	2,0	14	62	–	55	55	27	1/4	13	2	5,7	
28	1108	23	20	2,5	15	66	–	65	65	30	1/4"	13	2	5,7	
38	1108	23	24	3,0	18	70	15	80	78	38	1/4"	13	2	5,7	
42	1610	26	26	3,0	20	78	16	95	94	46	3/8"	16	2	20	
48	1615	39	28	3,5	21	106	28	105	104	51	3/8"	16	2	20	
55	2012	33	30	4,0	22	96	20	120	118	60	7/16"	22	2	31	
65	2012	33	35	4,5	26	101	19	135	115	68	7/16"	22	2	31	
75	2517	52	40	5,0	30	144	36	160	158	80	1/2"	25	2	49	
	• 3020										5/8"	32		92	
90	3020	52	45	5,5	34	149	33	200	160	100	5/8"	32	2	92	
100	3535	90	50	6	38	230	69	225	180	113	1/2"	49	3	113	
125	4545	114	60	7,0	46	288	86	290	230	147	3/4"	49	3	192	

Taper clamping bush																			
Size	Bore dimensions d1 [mm] available; H7 fit – feather keyway acc. to DIN 6885 sheet 1.																		
1008	Ø10	Ø11	Ø12	Ø14	Ø16	Ø18	Ø19	Ø20	Ø22	Ø24	Ø25								
1108	Ø10	Ø11	Ø12	Ø14	Ø16	Ø18	Ø19	Ø20	Ø22	Ø24	Ø25	Ø28[2)]							
1610	Ø14	Ø16	Ø18	Ø19	Ø20	Ø22	Ø24	Ø25	Ø28	Ø30	Ø32	Ø35	Ø38	Ø40	Ø42*				
1615	Ø14	Ø16	Ø18	Ø19	Ø20	Ø22	Ø24	Ø25	Ø28	Ø30	Ø32	Ø35	Ø38	Ø40	Ø42*				
2012	Ø14	Ø16	Ø18	Ø19	Ø20	Ø22	Ø24	Ø25	Ø28	Ø30	Ø32	Ø35	Ø38	Ø40	Ø42	Ø45	Ø48	Ø50	
2517	Ø16	Ø18	Ø19	Ø20	Ø22	Ø24	Ø25	Ø28	Ø30	Ø32	Ø35	Ø38	Ø40	Ø42	Ø45	Ø48	Ø50	Ø55	Ø60
3020	Ø25	Ø28	Ø30	Ø35	Ø38	Ø40	Ø42	Ø45	Ø48	Ø50	Ø55	Ø60	Ø65	Ø70	Ø75				
3535	Ø35	Ø38	Ø40	Ø42	Ø45	Ø48	Ø50	Ø55	Ø60	Ø65	Ø70	Ø75	Ø80	Ø85	Ø90				
4545	Ø55	Ø60	Ø65	Ø70	Ø75	Ø80	Ø85	Ø90	Ø95	Ø100	Ø105	Ø110							

• Only available for type TB 2
[1)] 1. BSW Thread
Coupling type TB 1/1; TB 2/2; TB 1/2 possible
Please order our separate dimension sheet (M 373054).
[2)] Bores with feather keyway (flat design) acc. to DIN 6885 sheet 3

Ordering example:

ROTEX® 38	92 Sh-A	1108	TB1 – Ø 24		TB2 – Ø 22	
Coupling size	Spider hardness	Taper clamping bush	Hub type	Finish bore	Hub type	Finish bore

Clamping ring hubs

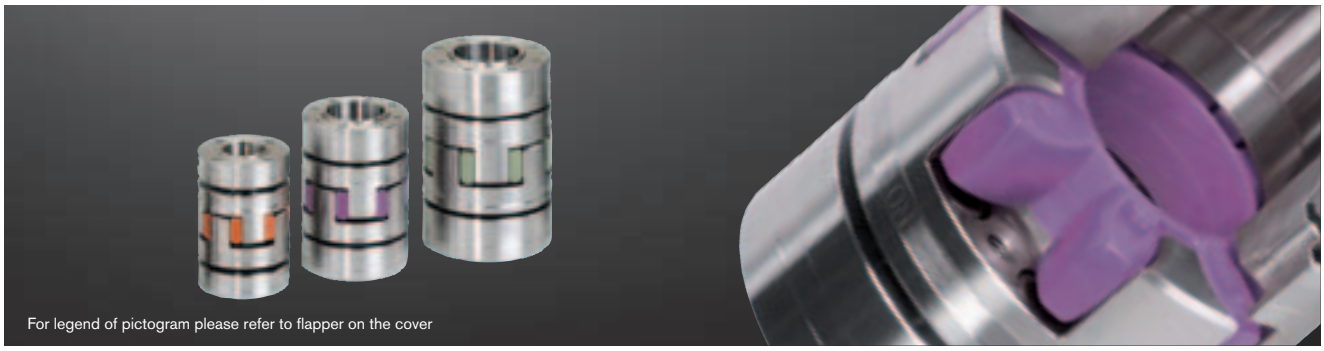

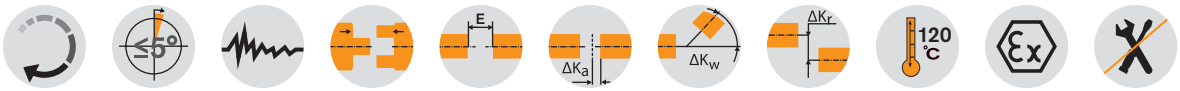

Components

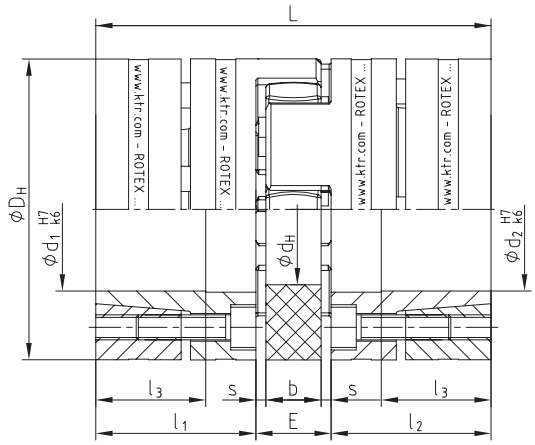

Tack thread M1 between clamping screws

Clamping ring hubs steel

Size	Torques [Nm] 1)				Dimensions [mm]								Clamping screws				Weight per hub with max. bore [kg]	Mass moment of inertia per hub with max. bore [kgm2]
	92 Sh A		98 Sh A															
	T_{KN}	T_{Kmax}	T_{KN}	T_{Kmax}	D_H 2)	d_H	L	l_1; l_2	l_3	E	b	s	M	Number z	T_A[Nm]	M_1		
19	10,0	20	17	34	40	18	66	25	18	16	12	2,0	M4	6	4,1	M4	0,179	0,44 x 10^{-4}
24	35,0	70	60	120	55	27	78	30	22	18	14	2,0	M5	4	8,5	M5	0,399	1,91 x 10^{-4}
28	95,0	190	160	320	65	30	90	35	27	20	15	2,5	M5	8	8,5	M5	0,592	4,18 x 10^{-4}
38	190,0	380	325	650	80	38	114	45	35	24	18	3,0	M6	8	14	M6	1,225	12,9 x 10^{-4}
42	265	530	450	900	95	46	126	50	35	26	20	3,0	M8	4	35	M8	2,30	31,7 x 10^{-4}
48	310	620	525	1050	105	51	140	56	41	28	21	3,5	M10	4	69	M10	3,08	52,0 x 10^{-4}
55	375	750	685	1370	120	60	160	65	45	30	22	4,0	M10	4	69	M10	4,67	103,0 x 10^{-4}
65	—	—	940	1880	135	68	185	75	55	35	26	4,5	M12	4	120	M12	6,70	191,0 x 10^{-4}
75	—	—	1920	3840	160	80	210	85	63	40	30	5,0	M12	5	120	M12	9,90	396,8 x 10^{-4}
90	—	—	3600	4500	200	104	245	100	75	45	34	5,5	M16	5	295	M16	17,70	1136 x 10^{-4}

Bore d1/d2 and the corresponding transmittable friction torques TR of clamping ring hub in [Nm] 1)

Size	Ø10	Ø11	Ø14	Ø15	Ø16	Ø19	Ø20	Ø24	Ø25	Ø28	Ø30	Ø32	Ø35	Ø38	Ø40	Ø42	Ø45	Ø48	Ø50	Ø55	Ø60	Ø65	Ø70	Ø80	Ø90	Ø95	Ø100	Ø105
19	27	32	69	84	57	94	110																					
24			70	87	56	97	114	116	133	192																		
28				108	131	207	148	253	285	315	382	330	433	503														
38							208	353	395	439	531	463	603	593	689	793	776											
42									358	398	483	416	547	536	625	571	704	851	865									
48											616	704	899	896	1030	962	1160	1379	1222	1543								
55													863	856	991	918	1119	1110	1247	1277	1672	1605	2008					
65															1446	1355	1637	1635	1827	1887	2429	2368	2930					
75																1710	2053	2059	2294	2384	3040	2983	3664	4293				
90																			3845	4249	4794	5858	5900	7036	8047	9247	9575	10845

1) Please see coupling selection on page 10 et seqq.
2) $ØD_H$ + 2 mm with high speeds for expansion of spider
The transmittable torques of the clamping connection consider the max. clearance with shaft fit k6 / bore H7, from Ø55 G7/m6. The torque is reduced with bigger clearance. For the stiffness calculation of the shaft/hollow shaft see KTR standard 45510 on our homepage www.ktr.com

Ordering example:

ROTEX® GS 24	98 Sh-A	6.0 Steel	Ø24	6.0 Steel	Ø20
Coupling size	Spider hardness	Hub type	Finish bore	Hub type	Finish bore

Clamping hubs

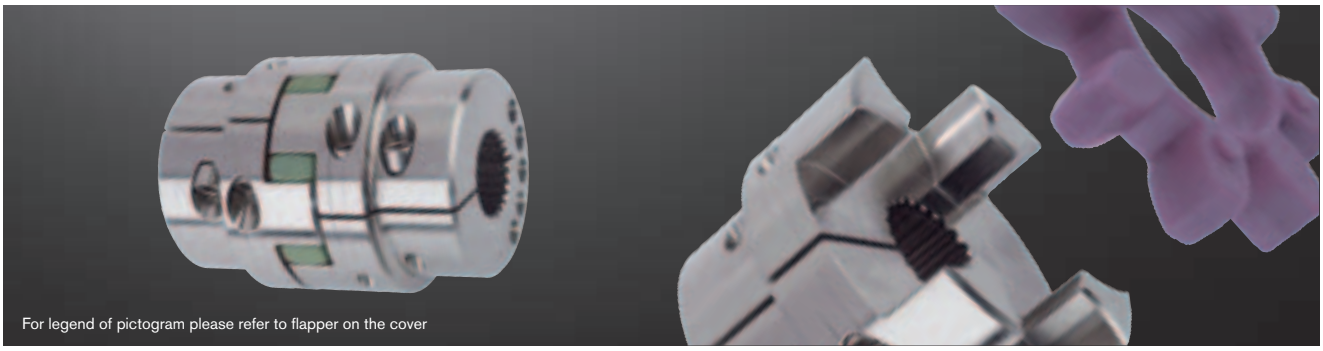

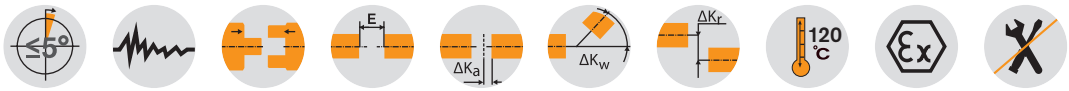

Components

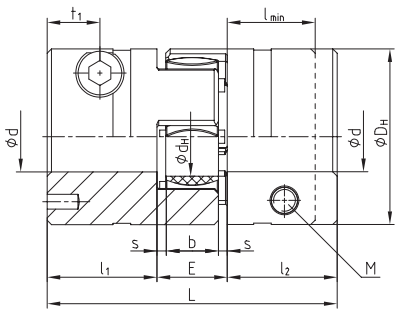

ROTEX® 19 - 28

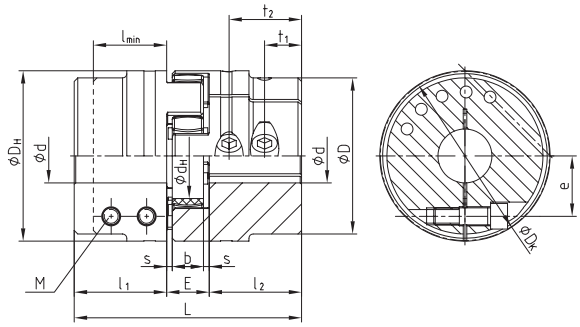

ROTEX® 38 - 90

ROTEX® as clamping hubs																
Size	Dimensions [mm]														Screw DIN EN ISO 4762	
	max. d	L	l_1;l_2	$l_{Min.}$	E	b	s	D_H	D	d_H	D_K	t_1	t_2	e	M	T_A [Nm]
19	20[1]	66	25	20	16	12	2,0	40	-	18	46,0	12	—	14,5	M6	14
24	28	78	30	25	18	14	2,0	55	-	27	57,5	12	—	20,0	M6	14
28	38	90	35	30	20	15	2,5	65	-	30	73,0	14[2]	—	25,0	M8	35
38	42	114	45	35	24	18	3,0	80	70	38	77,5	19	—	26,5	M8	35
42	50	126	50	42	26	20	3,0	95	85	46	93,5	18[2]	—	32,0	M10	69
48	55	140	56	46	28	21	3,5	105	95	51	105,0	21[2]	—	36,0	M12	120
55	68	160	65	50	30	22	4,0	120	110	60	119,5	26	51[2]	42,5[3]	M12	120
65	70	185	75	55	35	26	4,5	135	115	68	132,5	33	61[2]	50,0[3]	M12	120
75	80	210	85	65	40	30	5,0	160	135	80	158,0	36	68[2]	57,0[3]	M16	295
90	90	245	100	80	45	34	5,5	200	160	100	197,0	40	80[2]	72,0[3]	M20	580

Bore surface and the corresponding transmittable friction torques [Nm] of ROTEX® clamping hubs design 2.0																													
Size	Ø8	Ø10	Ø11	Ø14	Ø15	Ø16	Ø18	Ø19	Ø20	Ø22	Ø24	Ø25	Ø28	Ø30	Ø32	Ø35	Ø38	Ø40	Ø42	Ø45	Ø48	Ø50	Ø55	Ø60	Ø65	Ø70	Ø75	Ø80	Ø85	Ø90
19	44	46	47	51	52	53	55	57	58																					
24		59	60	64	65	66	68	70	71	73	76	77	80																	
28				139	141	144	148	150	152	157	161	163	170	174	178	185	191													
38					163	165	170	172	174	178	183	185	192	196	200	207	213	217	222											
42									291	297	304	308	318	325	332	342	353	360	367	377	387	394								
48									466	476	486	491	506	516	526	542	557	567	577	592	607	618	643							
55															1185	1215	1245	1266	1286	1316	1347	1367	1417	1468	1519					
65																1316	1347	1367	1387	1417	1448	1468	1519	1569	1620	1671				
75																			2869	2926	2983	3022	3117	3213	3309	3404	3500	3595		
90																			5220	5310	5400	5460	5610	5760	5910	6060	6210	6360	6510	6660

[1] With type 2.1 dmax. Ø17 mm
[2] With reduced hubs dimension t1 varies or the number of screws changes from 2-off to 1-off
[3] t1 and t2 have a different dimension e

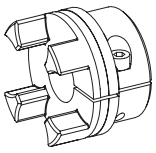

Type 2.0
Clamping hub, single slot, without feather keyway

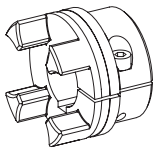

Type 2.1
Clamping hub, single slot, with feather keyway

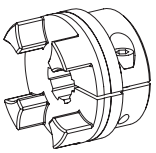

Type 2.3
Clamping hub with spline bore (For a selection of our programme of spline bores please see page 32)

Ordering example:

ROTEX® 24	98 Sh-A	2.1	Ø 24	2.0	Ø20
Coupling size	Spider hardness	Hub type	Finish bore	Hub type	Finish bore

Flange programme

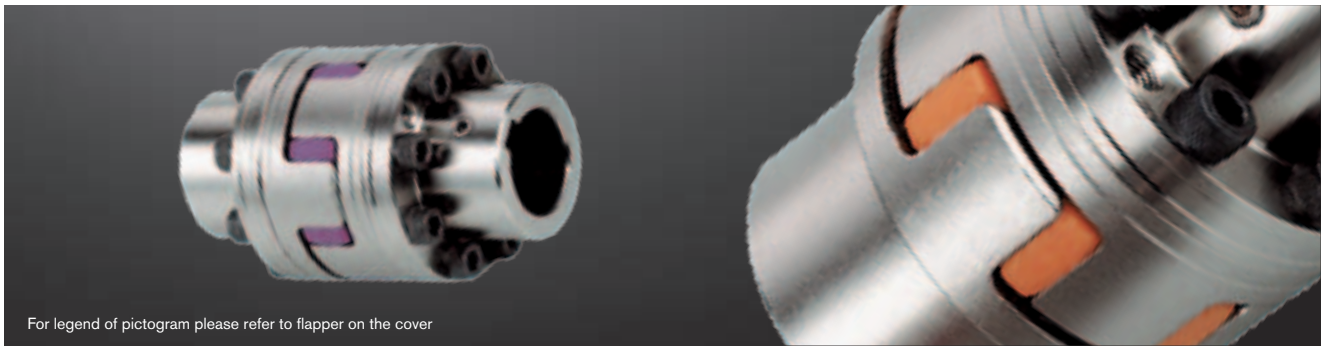

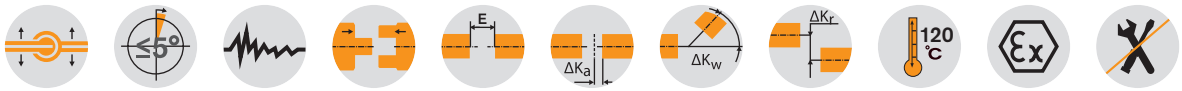

Components

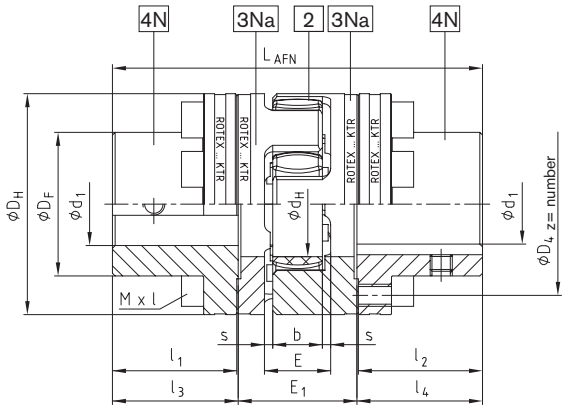

Type AFN

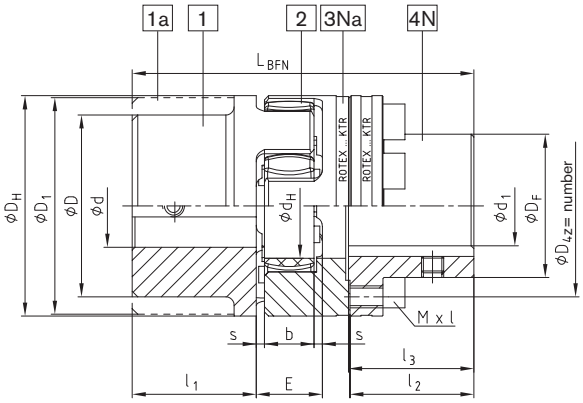

Type BFN

ROTEX® Type AFN (No. 002) and BFN (No. 004)																		
Size	Pilot bored Ød;ØD; ØD1	Component 4N max. finish bore Ød1	Dimensions [mm]													Cyl. screws 3) DIN EN ISO 4762 - 12.9			
			D_H	D_F	D_4	d_H	l_1; l_2	E	E_1	s	b	l_3; l_4	L_{AFN}	L_{BFN}		Mxl	z	Pitch 2)	$^{1)}T_A$ [Nm]
24	See jaw couplings on page 34 to 39 and Stock programme/basic programme on page 32 and 33	24	55	36	45	27	30	18	33	2,0	14	30,5	94	86		M5x16	8		10
28		28	65	42	54	30	35	20	39	2,5	15	35,5	110	100		M6x20	8	8x45°	17
38		38	80	52	66	38	45	24	43	3,0	18	45,5	134	124		M8x22	8		41
42		42	95	62	80	46	50	26	48	3,0	20	51,0	150	138		M8x25	12	16x22,5°	41
48		48	105	70	90	51	56	28	50	3,5	21	57,0	164	152		M8x25	12		41
55		55	120	80	102	60	65	30	60	4,0	22	66,0	192	176		M10x30	8	8x45°	83
65		65	135	94	116	68	75	35	65	4,5	26	76,0	217	201		M10x30	12	16x22,5°	83
75		75	160	108	136	80	85	40	75	5,0	30	86,5	248	229		M12x40	15		120
90		100	200	142	172	100	100	45	82	5,5	34	101,5	285	265		M16x40	15		295
100		110	225	158	195	113	110	50	97	6,0	38	111,5	320	295		M16x50	15		295
110		125	255	178	218	127	120	55	103	6,5	42	122,0	347	321		M20x50	15	20x18°	580
125		145	290	206	252	147	140	60	116	7,0	46	142,0	400	370		M20x60	15		580
140		165	320	235	282	165	155	65	128	7,5	50	157,5	443	409		M20x60	15		580
160		190	370	270	325	190	175	75	146	9,0	57	177,5	501	463		M24x70	15		1000
180		220	420	315	375	220	195	85	159	10,5	64	198,0	555	515		M24x80	18	24x15°	1000

[1] Screw tightening torque T_A [Nm].
[2] Thread in driving flange between cams.
[3] Coupling is delivered not assembled.

Ordering example:

ROTEX® 24	AFN	92 Sh-A	4N	Ø 38	4N	Ø35
Coupling size	Type	Spider hardness	Component	Finish bore	Component	Finish bore

Drop-out center design coupling

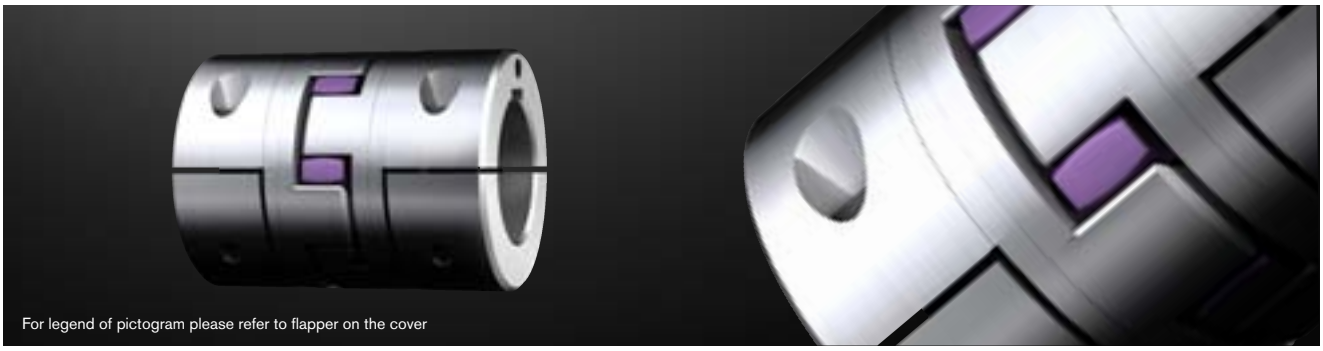

Components

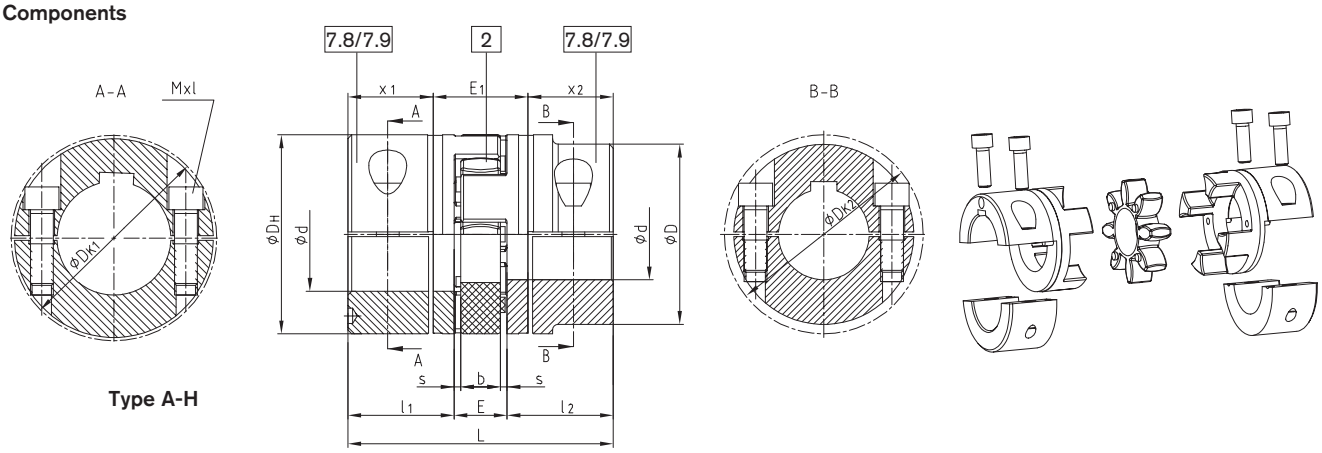

Type A-H

ROTEX® Type A-H														
Size	Max. finish bore Ød [mm]	Dimensions [mm]											Cyl. screws DIN EN ISO 4762	
		L	l_1; l_2	E	b	s	D_H	D	D_{K1}	D_{K2}	x_1/x_2	E_1	Mxl	Tightening torque T_A [Nm]
19	20	66	25	16	12	2,0	40	—	46	—	17,5	31	M6x16	14
24	28	78	30	18	14	2,0	55	—	57,5	—	22,5	33	M6x20	14
28	38	90	35	20	15	2,5	65	—	73	—	25,5	39	M8x25	35
38	45	114	45	24	18	3,0	80	—	83,5	—	35,5	43	M8x30	35
42	50	126	50	26	20	3,0	95	85	—	93,5	39	48	M10x30	69
	55							—	97	—			M10x35	
48	55	140	56	28	21	3,5	105	95	—	105	45	50	M12x35	120
	60							—	108,5	—			M12x40	
55	65	160	65	30	22	4,0	120	110	—	119,5	50	60	M12x40	120
	70							—	122	—			M12x45	
65	70	185	75	35	26	4,5	135	115	—	123,5	60	65	M12x40	120
	80							—	132,5	—			M12x45	
75	80	210	85	40	30	5,0	160	135	—	147,5	67,5	75	M16x50	295
	90							—	158	—				
90	90	245	100	45	34	5,5	200	160	—	176	81,5	82	M20x60	580
	110							—	197	—				
100[1)]	110	270	110	50	38	6,0	225	180	—	185,5	84	102	M16x50	295
110[1)]	120	295	120	55	42	6,5	255	200	—	208	90	115	M20x60	580
125[1)]	140	340	140	60	46	7,0	290	230	—	242,5	105	130	M24x70	1000

Please note:
With maximum bore the feather keyways are offset to each other by approx. 5°!
Hub material up to size 90: steel, from size 100: GJS

7.8= Shell clamping hub without feather key
7.9= Shell clamping hub with feather key

[1)] From size 100: 4 clamping screws for each clamping hub.

Ordering example:

ROTEX® 38	A-H	98 Sh-A	7.8	Ø 38	7.8	Ø30
Coupling size	Type	Spider hardness	Hub type	Finish bore	Hub type	Finish bore

Drop-out center design coupling with SPLIT hubs

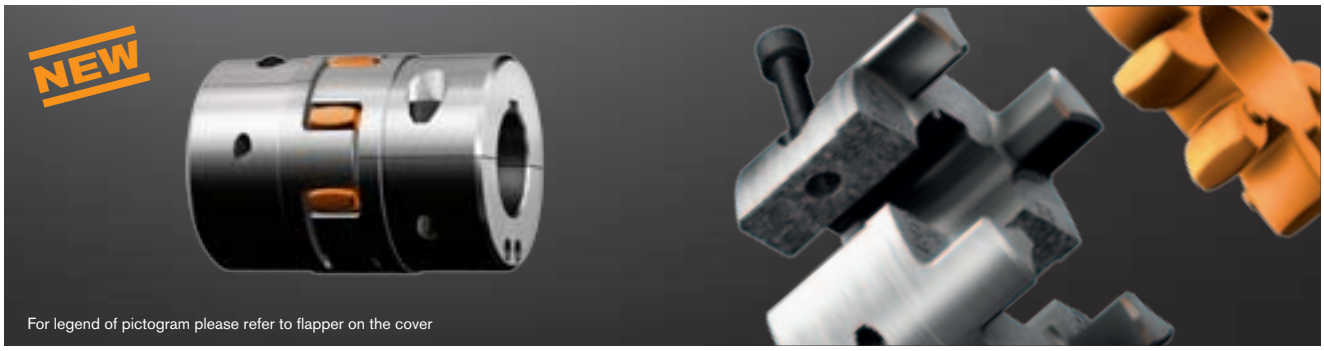

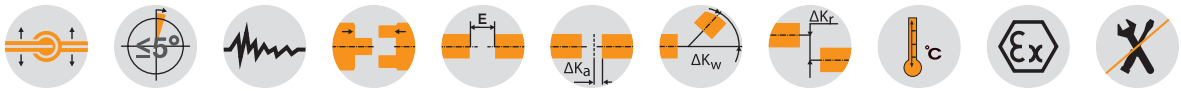

Components

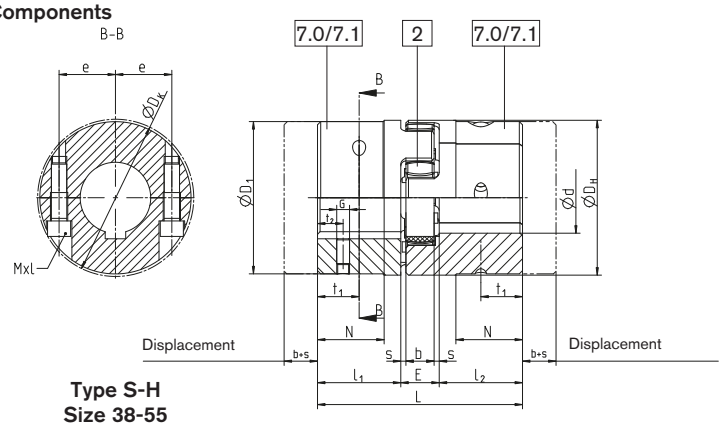

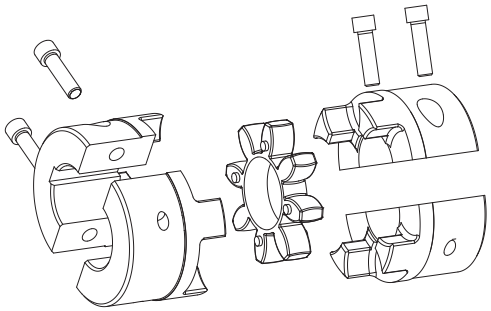

Type S-H
Size 38-55

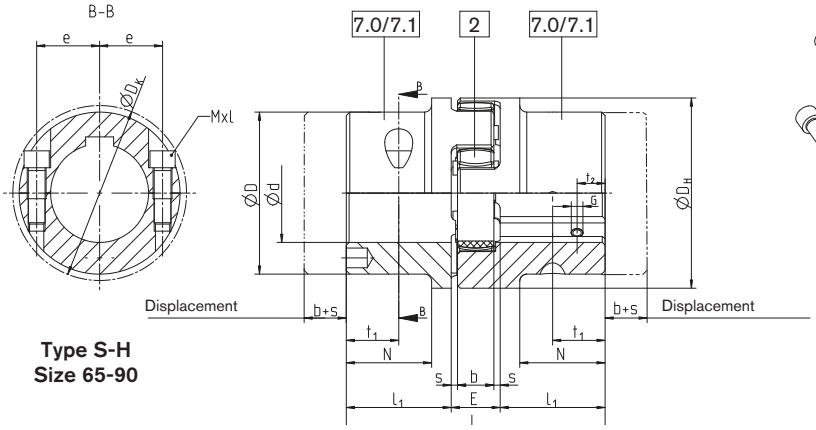

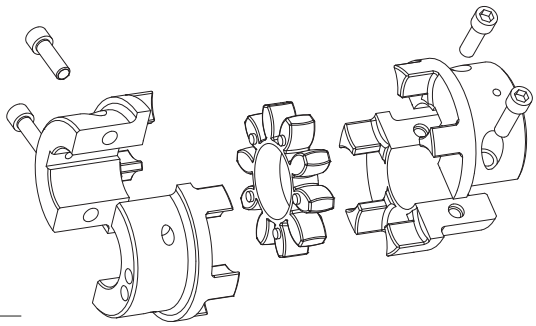

Type S-H
Size 65-90

ROTEX® Type S-H																	
Size	Finish bore Ød [mm]		Dimensions [mm]													Cyl. screws DIN EN ISO 4762	
	minimum	maximum	L	l_1; l_2	E	b	s	D_H	D_1	D_K	N	e	t_1	t_2	G	Mxl	Tightening torque T_A [Nm]
38	24	45	114	45	24	18	3	80	78	83,5	37	30	22,5	15		M8x30	34
42	24	55	126	50	26	20	3	95	94	97	40	30	25		M8	M10x30	67
48	24	60	140	56	28	21	3,5	105	104	108,5	45	35	28			M12x35	115
55	24	70	160	65	30	22	4	120	118	122	52	40	32,5	20		M12x40	115
65	24	70	185	75	35	26	4,5	135	115	123,5	61	45	37,5			M12x40	115
	70	80							135	132,5		50			M10		
75	40	80	210	85	40	30	5	160	135	147	69	51	42,5	25		M16x50	290
	80	90							160	158		57					
90	40	90	245	100	45	34	5,5	200	160	176	81	60	50	30	M12	M20x60	560
	90	110							200	197		72					

7.0= SPLIT hub without feather keyway
7.1= SPLIT hub with feather keyway

Ordering example:

ROTEX® 38	S-H	98 Sh-A	7.1	Ø 38	7.1	Ø30
Coupling size	Type	Spider hardness	Hub type	Finish bore	Hub type	Finish bore

Single-cardanic shaft coupling (Non Sparking)

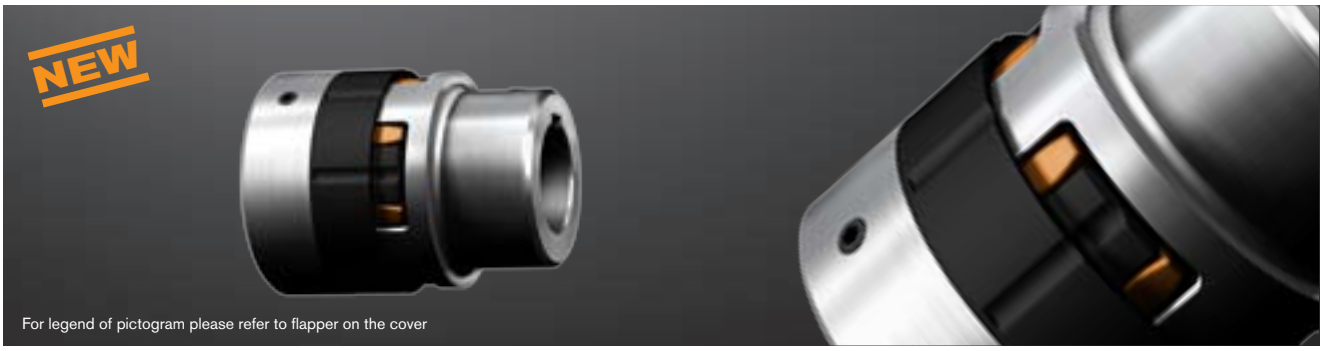

Components

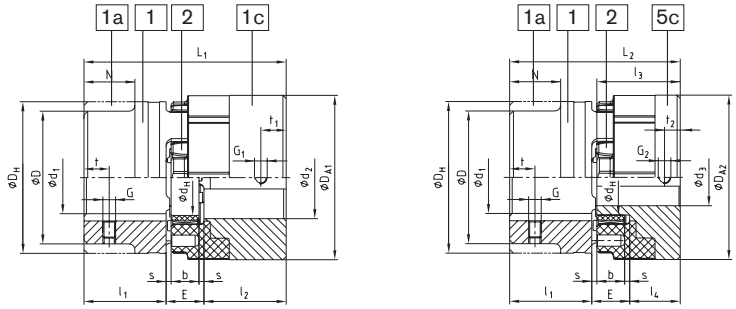

ROTEX® Standard (St) [3]			ROTEX® SP Type GN (No. 080)							ROTEX® SP Type EN (No. 081)							
Size	Spider (part 2) [1] Rated torque [Nm]	Component steel (St)	Component SP	Dimensions [mm] ROTEX® SP component 1c						Component SP	Dimensions [mm] ROTEX® SP component 5c						
				maximum d_2 [2]	l_2	D_{A1}	G_1	t_1	L_1		maximum d_2 [2]	l_3	l_4	D_{A2}	G_2	t_2	L_2
24	35	1a	1c	28	30	61	M5	10	78	5c	19	36	22	61	M5	6	70
		1b							98								90
28	95	1a	1c	32	35	72	M8	15	90	5c	22	42	26	72	M8	7	81
		1b							115								106
38	190	1	1c	42	45	87	M8	15	114	5c	28	50	30	87	M8	7	99
		1b							139								124
42	265	1	1c	48	50	103	M8	20	126	5c	35	56	34	103	M8	10	110
		1b							151								135
48	310	1	1c	55	56	114	M8	20	140	5c	40	60	36	114	M8	10	120
		1b							164								124
55	410	1	1c	65	65	130	M10	20	160	5c	45	66	40	130	M10	17	135
		1b							185								160
65	625	1	1c	75	75	146	M10	20	185	5c	55	75	44	146	M10	17	154
		1b							210								179

ROTEX® Standard (GJL) [4]			ROTEX® SP Type GN (No. 080)						ROTEX® SP Type EN (No. 081)							
Size	Spider (part 2) [1] Rated torque [Nm]	Component cast iron (GJL)	Component (SP)	Dimensions [mm] ROTEX® SP component 1c						Component SP	Dimensions [mm] ROTEX® SP component 5c						
				maximum d_2 [2]	l_2	D_A	G	t	L		maximum d_2 [2]	l_2	l_3	D_A	G	t_1	L_1
38	190	1	1c	42	45	87	M8	15	114	5c	28	50	30	87	M8	7	99
		1a															
		1b							139								124
42	265	1	1c	48	50	103	M8	20	126	5c	35	56	34	103	M8	10	110
		1a															
		1b							151								135
48	310	1	1c	55	56	114	M8	20	140	5c	40	60	36	114	M8	10	120
		1a															
		1b							164								144
55	410	1	1c	65	65	130	M10	20	160	5c	45	66	40	130	M10	17	135
		1a															
65	625	1	1c	75	75	146	M10	20	185	5c	55	75	44	146	M10	17	154

[1] Maximum torque of coupling TKmax. = rated torque of coupling TK rated x 2. Transmittable torque acc. to 92 Sh-A
[2] Bore H7 with keyway to DIN 6885 sheet 1 [JS9] and thread for setscrews
[3] 3) For dimensions of standard ROTEX® hubs (St) 1, 1a, 1b see catalogue on page 36.
[4] 4) For dimensions of standard ROTEX®hubs (GJL) 1, 1a, 1b see catalogue on page 34.
■ = Available from stock

Ordering example:

ROTEX® SP 38	GJL	92 Sh-A	1a	Ø45	1c	Ø42
Coupling size	Material of component 1;1a;1b	Spider hardness	Component	Finish bore	Component	Finish bore

Double-cardanic shaft coupling (Non Sparking)

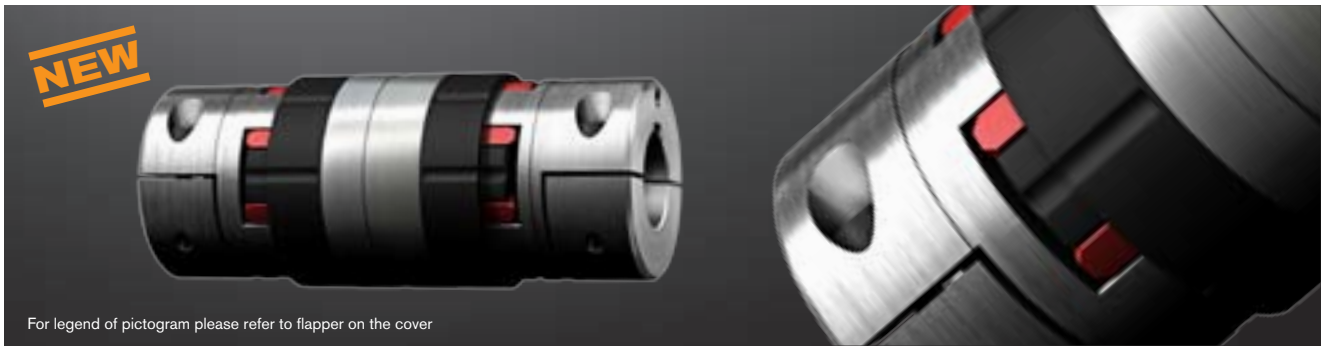

Components

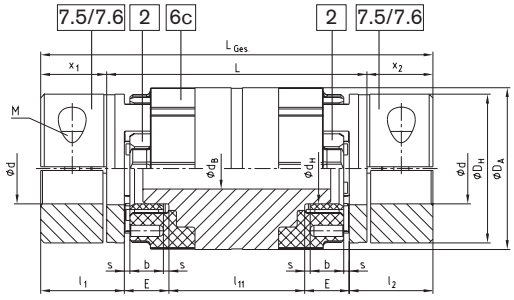

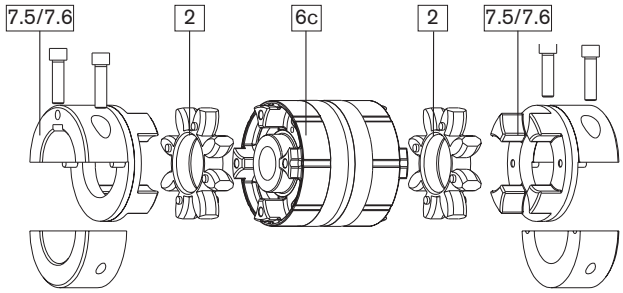

ROTEX® SP Type ZS-DKM-C (No. 085)																
Size	Drop-out center length L	Spider (part 2) 1) Rated torque [Nm]	Dimensions [mm] General component 7.5/7.6 steel												Dimensions [mm] ROTEX® SP comp. 6c Al-H3)	
			Maximum finish bore 2) d	LGes.	l1; l2	x1; x2	E	b	s	DH	DA	dH	M	TA [Nm]	dB	l11
24	100	35	28	145	30	22,5	18	14	2,0	55	61	27	M6	14	14	49
	140			185												89
28	100	95	38	151	35	25,5	20	15	2,5	65	72	30	M8	35	16	41
	140			191												81
38	100	190	45	171	45	35,5	24	18	3,0	80	87	38	M8	35	22	33
	140			211												73
42	100	265	55	178	50	39	26	20	3,0	95	103	46	M10	69	30	26
	140			218												66
48	140	310	60	230	56	45	28	21	3,5	105	114	51	M12	120	35	62
55	140	410	70	240	65	50	30	22	4,0	120	130	60	M12	120	35	50
	180			280												90
	200			300												110
65	140	625	80	260	75	60	35	26	4,5	135	146	68	M12	120	48	40
	180			300												50

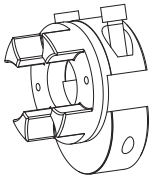

Type 7.5 clamping hub type DH without feather keyway for double-cardanic connection

Type 7.6 clamping hub type DH with feather keyway for double-cardanic connection

1) Maximum torque of coupling TKmax. = rated torque of coupling TK rated x 2. Transmittable torque acc. to 92 Sh-A-GS
2) Hub type 7.5= without keyway; hub type 7.6=with keyway to DIN 6685 sheet 1 (JS9)
3) Size 42 with drop-out center length 100 made of steel
■ = Available from stock

Ordering example:

ROTEX® SP 38	ZS-DKM-C	140	98 Sh-A-GS	7.5	Ø38	7.5	Ø30
Coupling size	Type	Drop-out center length L	Spider hardness	Hub type	Finish bore	Hub type	Finish bore

Double-cardanic shaft coupling

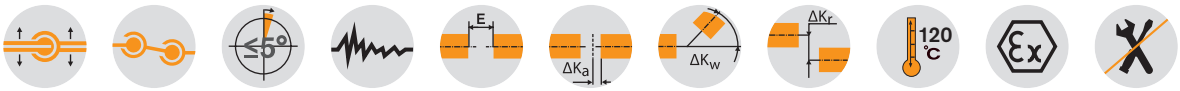

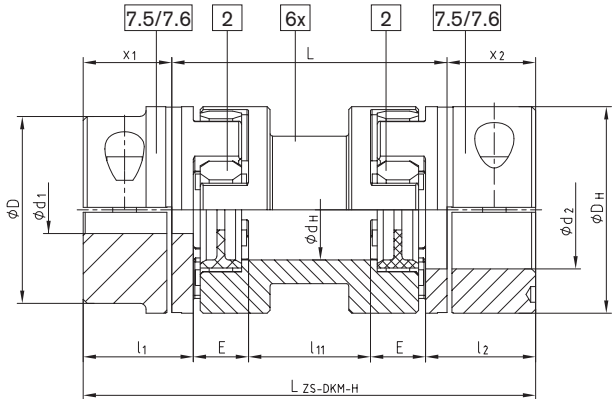

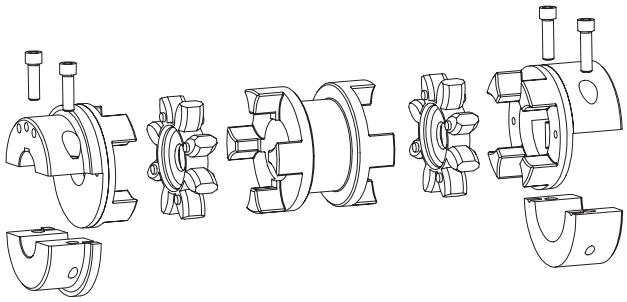

Type ZS-DKM-H

ROTEX® Type ZS-DKM-H																		
Size	Drop-out center length L [mm]	Max. finish bore Ød1/d2 [mm]	Spider (part 2) 1) TKN [Nm]	Dimensions [mm]							Cyl. screws DIN EN ISO 4762 – 12.9		Max. displacements					Weight2) [kg]
													Axial [mm]	with n = 1500 rpm		with n = 3000 rpm		
				D_H	d_H	l_1; l_2	x_1; x_2	l_{11}	E	$L_{ZS-DKM-H}$	M	TA [Nm]		Radial [mm]	Angular [°]	Radial [mm]	Angular [°]	
24	100	28	35	55	27	30	22,5	49	18	145	M6	14	1,4	1,17		0,87		1,40
	140							89		185				1,87		1,40		1,60
28	100	38	95	65	30	35	25,5	41	20	151	M8	35	1,5	1,06		0,80		1,90
	140							81		191				1,76		1,32		2,20
38	100	45	190	80	38	45	35,5	33	24	171	M8	35	1,8	0,99		0,74		3,90
	140							73		211				1,69		1,27		4,10
42	100	55	265	95	46	50	39,0	26	26	178	M10	69	2,0	0,91		0,68		5,10
	140							66		218				1,60		1,20		5,70
48	100	60	310	105	51	56	45,0	22	28	190	M12	120	2,1	0,87		0,65		7,10
	140							62		230				1,57		1,18		7,90
55	100	70	410	120	60	65	50,0	10	30	200	M12	120	2,2	0,70	1,0	0,52	0,75	9,50
	140							50		240				1,40		1,05		11,20
	180							90		280				2,09		1,57		12,30
	200							110		300				2,44		1,83		12,80
65	140	80	625	135	68	75	60,0	40	35	260	M12	120	2,6	1,31		0,98		16,10
	180							80		300				2,00		1,50		16,80
75	140	90	1280	160	80	85	67,5	25	40	275	M16	295	3,0	1,13		0,85		23,60
	180							65		315				1,83		1,37		26,00
	200							85		335				2,19		1,64		27,00
	250							135		385				3,05		2,29		29,50
90	180	110	2400	200	100	100	81,5	53	45	343	M20	580	3,4	1,71		1,28		48,90
	250							123		413				2,93		2,19		52,60

[1] Maximum torque of coupling $T_{Kmax.}$ = rated torque of coupling T_{KN} x 2
Size 24 to 90 spider type 98 Sh-A-GS
ZS-DKM-H: Transmittable torque acc. to 98-Sh A-GS
[2] Referring to max. bore
Finish bore according to ISO fit H7, feather keyway according to DIN 6885 sheet 1 - JS9

7.5= Shell clamping hub without feather key for a double-cardanic connection
7.6= Shell clamping hub with feather key for a double-cardanic connection
ATTENTION: The standard line is only applicable for horizontal assembly. Vertical assembly on request.

Ordering example:

ROTEX® 38	ZS-DKM-H	140	98 Sh-A-GS	7.5	Ø 38	7.5	Ø30
Coupling size	Type	Shaft distance dimension L	Spider hard-ness	Hub type	Finish bore	Hub type	Finish bore

Double-cardanic shaft coupling

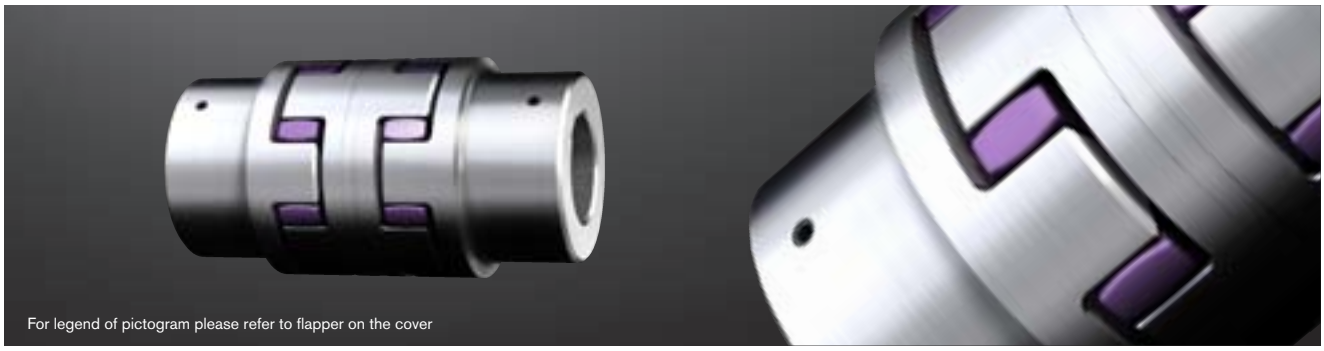

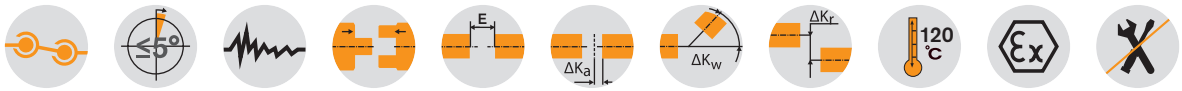

Components

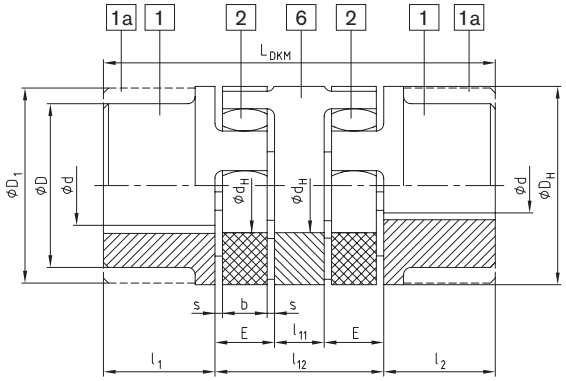

Type DKM

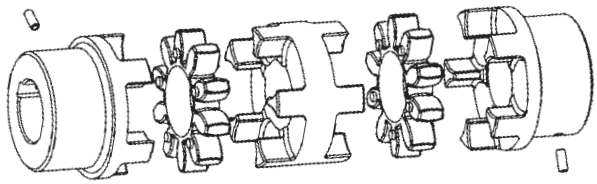

ROTEX® Type DKM (No. 018)															
Größe	Ød, ØD, ØD1	Spider (part 2) Rated torque [Nm] 1		Dimensions [mm]									Max. displacement with n = 1500 rpm		
		92 Sh-A	98 Sh-A	D_H	d_H	l_1; l_2	l_{11}	l_{12}	E	s	b	L_{DKM}	Radial [mm]	Angular [°]	Axial [mm]
19	See jaw couplings on page 34 to 39 Stock programme/basic programme on page 32 and 33	10	17	40	18	25	10	42	16	2,0	12	92	0,45	1,0	+1,2/-1,0
24		35	60	55	27	30	16	52	18	2,0	14	112	0,59	1,0	+1,4/-1,0
28		95	160	65	30	35	18	58	20	2,5	15	128	0,66	1,0	+1,5/-1,4
38		190	325	80	38	45	20	68	24	3,0	18	158	0,77	1,0	+1,8/-1,4
42		265	450	95	46	50	22	74	26	3,0	20	174	0,84	1,0	+2,0/-2,0
48		310	525	105	51	56	24	80	28	3,5	21	192	0,91	1,0	+2,1/-2,0
55		410	685	120	60	65	28	88	30	4,0	22	218	1,01	1,0	+2,2/-2,0
65		625	940	135	68	75	32	102	35	4,5	26	252	1,17	1,0	+2,6/-2,0
75		1280	1920	160	80	85	36	116	40	5,0	30	286	1,33	1,0	+3,0/-3,0
90		2400	3600	200	100	100	40	130	45	5,5	34	330	1,48	1,0	+3,4/-3,0

[1] For selection please see page 10 et seqq.
Finish bore according to ISO fit H7, feather keyway according to DIN 6885 sheet 1 - JS9

Ordering example:	ROTEX® 38	DKM	GJL	98 Sh-A	1	Ø 38	1	Ø30
	Coupling size	Type	Material	Spider hardness	Component	Finish bore	Component	Finish bore

ROTEX® CF, CFN, DF and DFN
Flexible jaw couplings

Flange programme

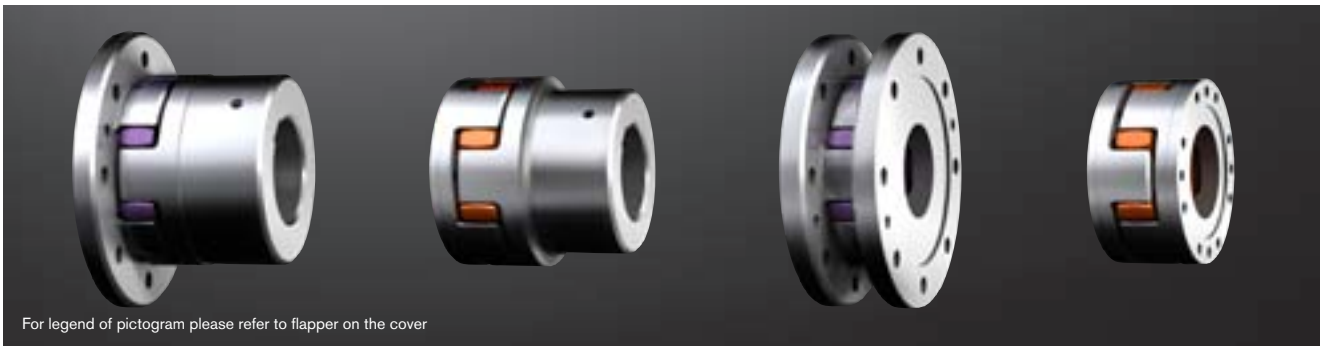

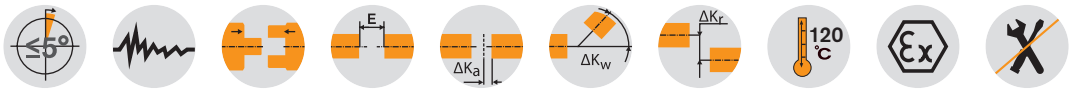

Components

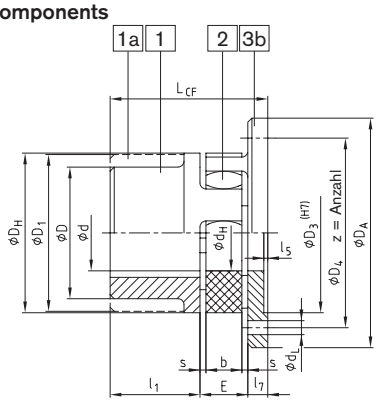

Type CF

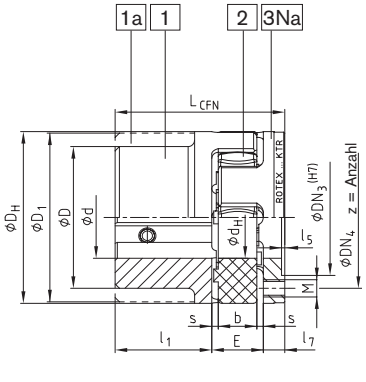

Type CFN

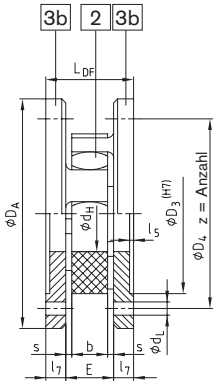

Type DF

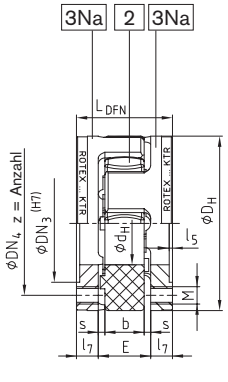

Type DFN

ROTEX® Type CF, CFN (No. 005) and DF, DFN (No. 006)																							
Size	d, ØD, ØD1	General dimension								Dimensions CF and DF							Dimensions CFN and DFN						
		D_H	d_H	l_1	E	s	b	l_5	l_7	D_A	D_3	D_4	z	d_L	L_{CF}	L_{DF}	D_{N3}	D_{N4}	M	z	Pitch	L_{CFN}	L_{DFN}
24	See shaft coupling on page 34 to 39 and Stock programme/basic programme on page 32 and 33	55	27	30	18	2,0	14	1,5	8	80	55	65	5	4,5	56	34	36	45	M5	8		56	34
28		65	30	35	20	2,5	15	1,5	10	100	65	80	6	6,6	65	40	44	54	M6	8	8x45°	65	40
38		80	38	45	24	3,0	18	1,5	10	115	80	95	6	6,6	79	44	54	66	M8	8		79	44
42		95	46	50	26	3,0	20	2,0	12	140	95	115	6	9,0	88	50	65	80	M8	12	16x22,5°	88	50
48		105	51	56	28	3,5	21	2,0	12	150	105	125	8	9,0	96	52	75	90	M8	12		96	52
55		120	60	65	30	4,0	22	2,0	16	175	120	145	8	11,0	111	62	84	102	M10	8	8x45°	111	62
65		135	68	75	35	4,5	26	2,0	16	190	135	160	10	11,0	126	67	96	116	M10	12	16x22,5°	126	67
75		160	80	85	40	5,0	30	2,5	19	215	160	185	10	13,5	144	78	112	136	M12	15		144	78
90		200	100	100	45	5,5	34	3,0	20	260	200	225	12	13,5	165	85	145	172	M16	15		165	85
100		225	113	110	50	6,0	38	4,0	25	285	225	250	12	13,5	185	100	165	195	M16	15		185	100
110		255	127	120	55	6,5	42	4,0	26	330	255	290	12	18,0	201	107	180	218	M20	15	20x18°	201	107
125		290	147	140	60	7,0	46	5,0	30	370	290	325	16	18,0	230	120	215	252	M20	15		230	120
140		320	165	155	65	7,5	50	5,0	34	410	320	360	16	22,0	254	133	245	282	M20	15		254	133
160		370	190	175	75	9,0	57	5,0	38	460	370	410	16	22,0	288	151	280	325	M24	15		288	151
180		420	220	195	85	10,5	64	5,5	40	520	420	465	16	26,0	320	165	330	375	M24	18	24x15°	320	165

For other flange programmes see page 43.

Other types: ROTEX® CF-H
Flange drop-out center design coupling
Please order our separate dimension sheet (M412069)

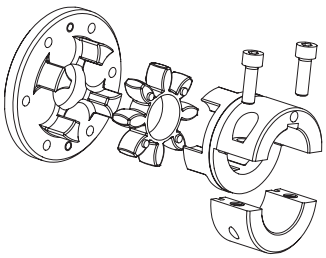

Ordering example:	ROTEX® 38	CF	92 Sh-A	1	GJL	Ø20
	Coupling size	Type	Spider hardness	Hub side Component	Material	Finish bore

Intermediate shaft programme

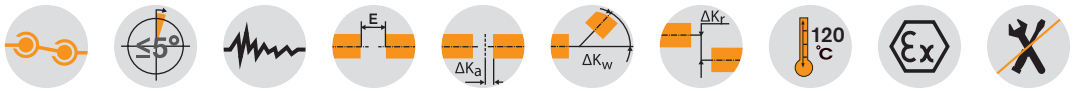

Components

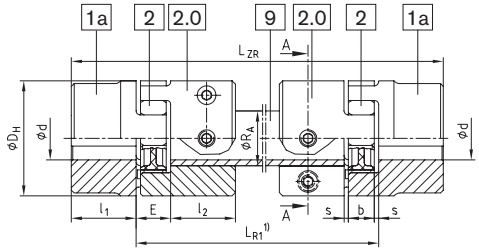

Type ZR
(with GS spider)

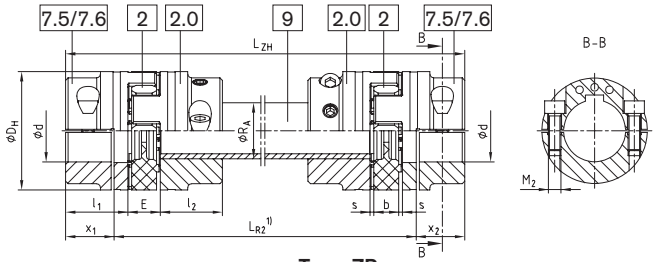

Type ZR
(with GS spider and clamping hubs type DH for a double-cardanic connection 7.5 or 7.6)

ROTEX® Type ZR (No. 037)

Size	Finish bore Ød		Dimensions [mm]						Intermediate pipe Torsional stiffness/m		Clamping screw Part 2.0		Clamping screw Component 7.5/7.6		LZR; LZH	min. LR1	min. LR2	Locking screw G1	Cone bore dp [mm]	Axial displacement [mm]	Angular displacement [degrees]
	Part 1a	Part 7.5/7.6	D_H	l_1; l_2	x_1; x_2	E	s	b	R_A	$C^{2)}$ [Nm²/rad]	M_1	T_A [Nm]	M_2	T_A [Nm]							
19	25	20	40	25	17,5	16	2,0	12	Ø20x3	954,9	M6	14	M6	10		110	97	M6	4,0	1,2	0,9
24	35	28	55	30	22,5	18	2,0	14	Ø30x4	4522	M6	14	M6	14		128	111	M8	5,5	1,4	0,9
28	40	38	65	35	25,5	20	2,5	15	Ø35x4	7611	M8	35	M8	35		145	129	M10	7,0	1,5	0,9
38	48	45	80	45	35,5	24	3,0	18	Ø40x4	11870	M8	25	M8	35		180	157	M12	8,5	1,8	1,0
42	55	55	95	50	39,0	26	3,0	20	Ø45x4	17487	M10	49	M10	69	L_{R1} + 2 • l_1 / L_{R2} + 2 • x_1/x_2	198	174	M12	8,5	2,0	1,0
48	62	60	105	56	45,0	28	3,5	21	Ø50x4	24648	M12	86	M12	120		217	190	M16	12	2,1	1,1
55	74	70	120	65	50,0	30	4,0	22	Ø55x4	33544	M12	120	M12	120		242	220	M16	12	2,2	1,1
65	80	80	135	75	60,0	35	4,5	26	Ø65x5	68329	M12	120	M12	120		281	250	M16	12	2,6	1,2
75	95	90	160	85	67,5	40	4,0	30	Ø75x5	108000	M16	295	M16	295		318	285	M16	12	3,0	1,2

[1)] For inquiries and orders please mention the shaft distance dimension LR1/LR2 along with the maximum speed to review the critical bending speed.
[2)] Torsion spring stiffness with a length of 1 m of intermediate pipe
Finish bore acc. to ISO fit H7, feather keyway acc. to DIN 6885 sheet 1 - JS9
Friction torques of clamping hubs have to be taken into account. Please order dimension sheet No. 583613.

Not permissible for crane and hoisting gear drives

Diagramme for coupling selection:

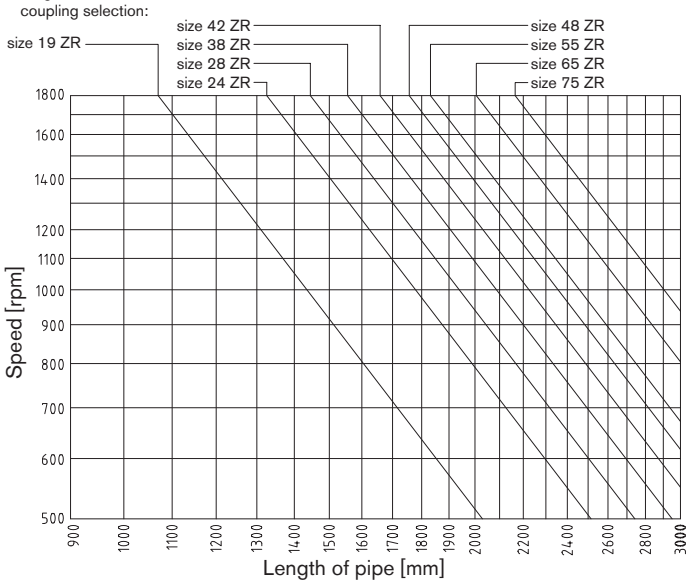

Ordering example:

ROTEX® 38	ZR	1200	98 Sh-A-GS	7.5	Ø 38	7.5	Ø30
Coupling size	Type	Shaft distance dimension LR1/LR2	Spider hardness	Hub type	Finish bore	Hub type	Finish bore

ROTEX® BTAN and SBAN
Flexible jaw couplings

With brake drum / with brake disk

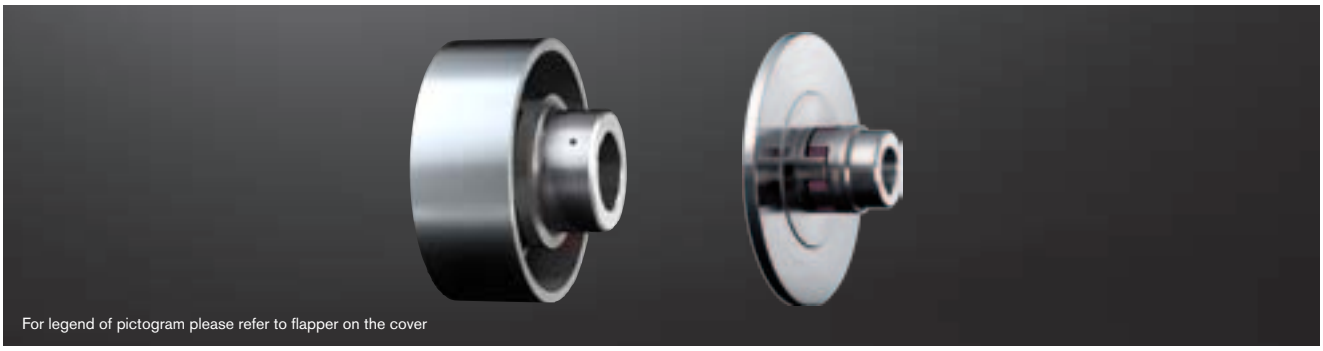

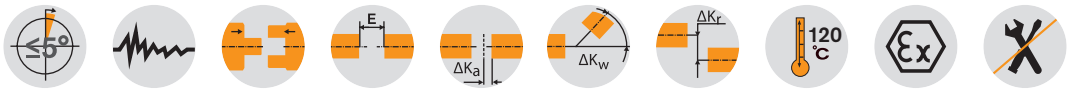

ROTEX® Type BTAN (No. 011) and SBAN (No. 013)

Size	Pilot bore Ød; ØD ØD1	Finish bore max.d1		Dimensions [mm]										
		GJS	Steel	D_H	D_2	D_4	d_H	z	Pitch 1)	M	TA [Nm]	l_1; l_2	E	L
38	See jaw couplings on page 34 to 39 Stock programme/basic programme on page 32 and 33	—	34	80	50	66	38	8	8 x 45°	M8	41	45	24	114
42		—	42	95	60	80	46	12	16 x 22,5°	M8	41	50	26	126
48		—	48	105	68	90	51	12		M8	41	56	28	140
55		—	55	120	78	102	60	8	8 x 45°	M10	83	65	30	160
65		—	65	135	92	116	68	12	16 x 22,5°	M10	83	75	35	185
75		—	75	160	106	136	80	15		M12	120	85	40	210
90		—	100	200	140	172	100	15		M16	295	100	45	245
100		100	—	225	156	195	113	15	20 x 18°	M16	295	110	50	270
110		110	—	255	176	218	127	15		M20	580	120	55	295
125		130	—	290	204	252	147	15		M20	580	140	60	340

Type BTAN												Type SBAN											
Brake drum	ROTEX® BTAN dimension „C“										Speed rpm [V] (30 m/s)	Brake disk	ROTEX® SBAN dimension “N”										Speed rpm [V] (30 m/s)
	38	42	48	55	65	75	90	100	110	125			38	42	48	55	65	75	90	100	110	125	
160x60	14										3550	200x12,5	31,25										2800
200x75	9	12	17	24							2800	250x12,5	31,25	34,25	39,25								2240
250x95	1	4	9	16	25	33					2240	315x16		32,5	37,5	44,5	53,5	61,5					1800
315x118		-5	0	7	16	24	36				1800	400x16			37,5	44,5	53,5	61,5	73,5	81,5	88,5		1400
400x150		-18	-13	-6	3	11	23	31	38		1400	500x16				44,5	53,5	61,5	73,5	81,5	88,5	104,5	1120
500x190					-12	-4	8	16	23	39	1120	630x20					51,5	59,5	71,5	79,5	86,5	102,5	900
630x236						-22	-10	-2	5	21	900	710x20					51,5	59,5	71,5	79,5	86,5	102,5	800
710x265								-13	-6	10	800	800x25							69	77	84	100	710
800x300										-4	710	900x25									84	100	630

1) Thread in the hub between the cams
Other sizes on request according to dimension sheet No.:
BTAN:M 380821
SBAN straight: M380822; cranked: M 370065
FNN hub: M 380823
Finish bore according to ISO fit H7, feather keyway acc. to DIN 6885 sheet 1 - JS9

Ordering example:

ROTEX® 38	BTAN	Ø200x75	98 Sh-A	1Nd	Ø 38	1	Ø30
Coupling size	Type	Ø brake drum x width	Spider hardness	Component	Finish bore	Component	Finish bore

Components

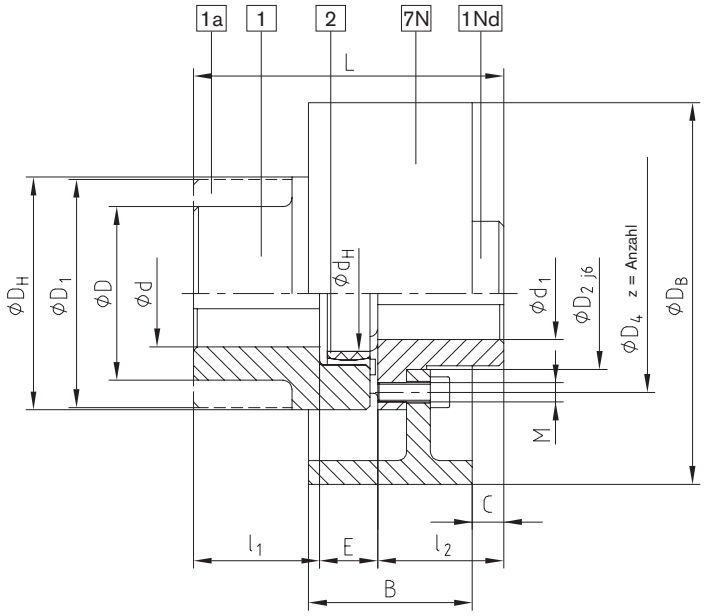

Brake drum
type BTAN

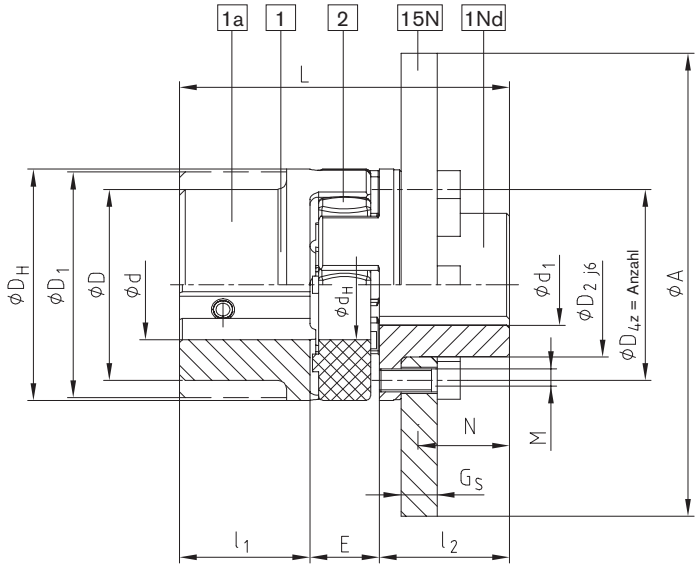

Brake disk
type SBAN

ROTEX® AFN-SB
Flexible jaw couplings

Drop-out center design coupling with brake disk

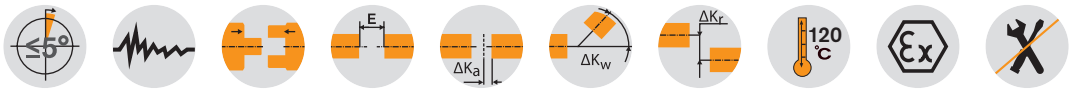

Components

4Nv | 3Na | 2 | 15Nx | 3Na | 4Nx

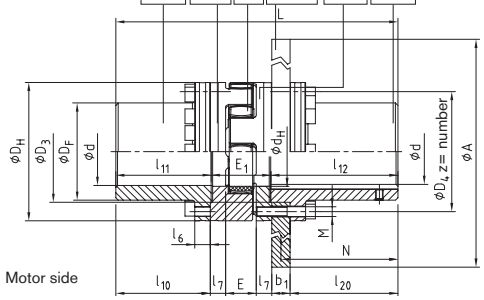

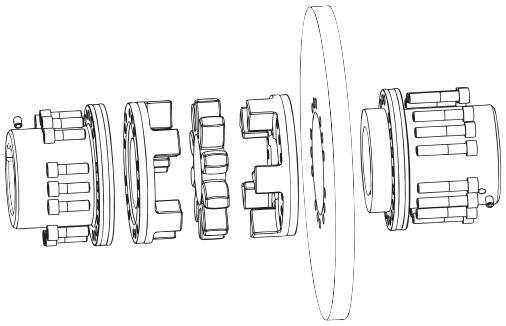

ROTEX® Type AFN-SB special													
Size	Finish bore d		Dimensions [mm]										
	Min.	max	D_H	D_F	D_3 H7/h7	D_4	d_H	E	E_1	M	z	Pitch	TA [Nm]
65	22	65	135	94	96	116	68	35	65	M10	12	16x22,5°	83
75	30	75	160	108	112	136	80	40	75	M12	15		120
90	40	100	200	142	145	172	100	45	82	M16	15		295
100	46	110	225	158	165	195	113	50	97	M16	15		295
110	60	125	255	178	180	218	127	55	103	M20	15	20x18°	580
125	60	145	290	206	215	252	147	60	116	M20	15		580
140	60	165	320	235	245	282	165	65	128	M20	15		580
160	80	190	370	270	280	325	190	75	146	M24	15		1000
180	85	220	420	315	330	375	220	85	159	M24	18	24x15°	1000

ROTEX® Bauart AFN-SB spezial											
Size	Torque with 98Sh-A [1]		Max. speed [rpm]	Max.braking torque [Nm]2)	Dimensions [mm]						
	T_{KN}	T_{Kmax}			l_7	l_{10}	l_{11}	l_{12}	l_{20}	N	L
65	940	1880	3450	1880	16	112,5	113,5	166,0	135	150	344,5
75	1920	3840	3250	3840	19	131,5	133,0	166,5	135	150	374,5
90	3600	7200	3000	7200	20	164,0	165,5	206,5	175	190	454,0
100	4950	9900	2800	9900	25	153,5	155,0	206,5	175	190	458,5
110	7200	14400	2600	14400	26	201,5	203,5	212,0	180	195	518,5
125	10000	20000	2250	20000	30	198,5	200,5	212,0	180	195	528,5
140	12800	25600	1800	25600	34	244,5	247,0	252,5	220	235	627,5
									210 [3]	230 [3]	
160	19200	38400	1500	38400	38	226,5	229,0	252,5	220	235	627,5
									210 [3]	230 [3]	
180	28000	56000	1350	56000	40	195,0	198,0	252,5	220	235	609,5

ROTEX® Selection of coupling/brake disk											
Size	Brake disk ØA x b1										
	355x30	400x30	450x30	500x30	560x30	630x30	710x30	800x30	900x30	900x40	1000x40
65	x	x	x								
75		x	x	x							
90			x	x	x	x					
100				x	x	x					
110				x	x	x	x				
125						x	x	x			
140							x	x	x	x	x
160							x	x	x	x	x
180							x	x	x	x	x

[1] For selection see page 10 et seqq. [2] The maximum braking torque must not exceed the maximum torque of the coupling. [3] Dimensions for a brake disk width b1 of 40 mm.

Ordering example:

ROTEX® 90	AFN-SB special	Ø450x30	98 Sh-A	4Nv	Ø90	4Nx	Ø90
Coupling size	Type	ØBrake disk, x width	Spider hard-ness	Component	Finish bore	Component	Finish bore

Shiftable coupling shiftable at standstill

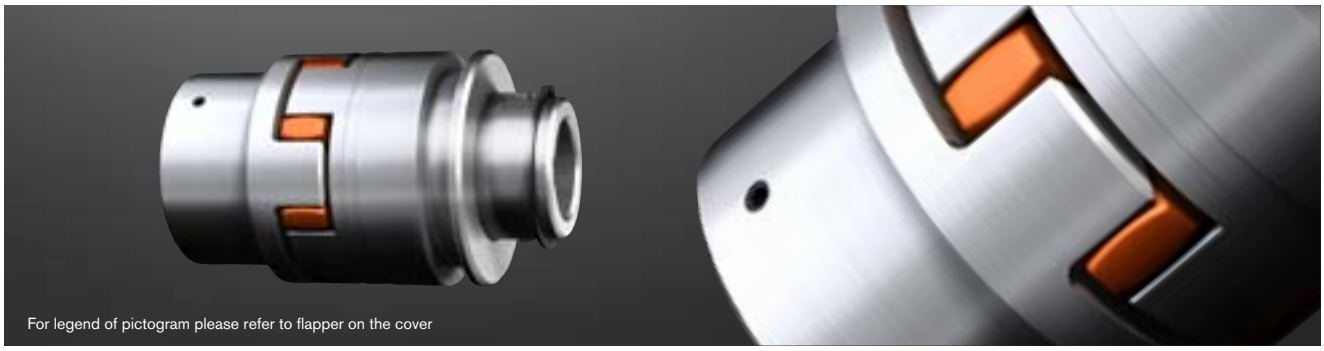

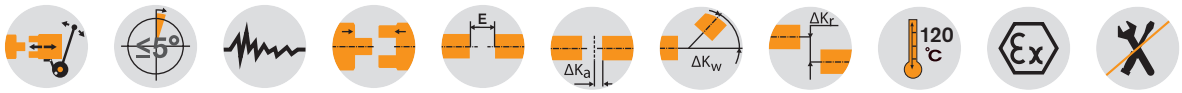

Components

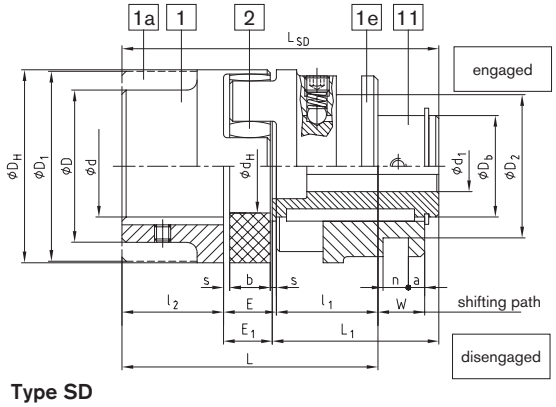

Type SD

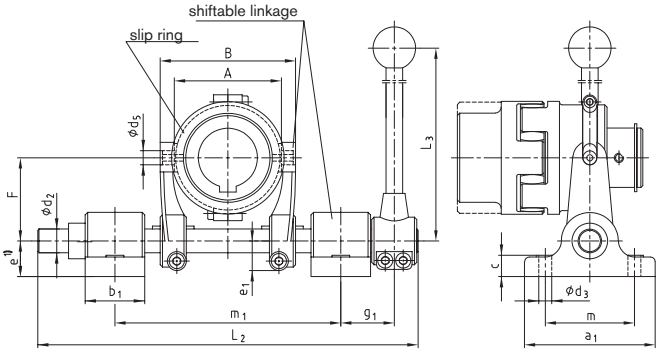

Type SD with slip ring and shiftable linkage

ROTEX® Type SD (No. 015)

Size	Ød, ØD, ØD1	Finish bore d1		Dimensions [mm]																Shifting force set in [N]	Slip ring size	Shiftable linkage size
		Min.	max.	D_H	D_2±0,1	Db	d_H	l_1;l_2	E	s	b	E_1	L	L_1	W	a	n±0,1	L_{SD}			
24	See jaw couplings on page 34 to 39 Stock programme/basic progr. see page 32 and 33	8	18	55	41	30	27	30	18	2,0	14	16,5	78	51,5	16,0	6	6,0	98	110	—	—
28		10	22	65	58	36	30	35	20	2,5	15	18,0	90	60,0	17,5	8	8,0	113	130	—	—
38		12	28	80	70,5	45	38	45	24	3,0	18	22,0	114	73,0	21,0	8	12,5	140	150	1.1	1
42		14	32	95	70,5	50	46	50	26	3,0	20	24,0	126	82,0	23,0	8	12,5	156	180	1.1	1
48		15	40	105	89,5	60	51	56	28	3,5	21	25,5	140	90,5	24,5	6	17,5	172	200	2.2	2
55		18	48	120	112,5	70	60	65	30	4,0	22	27,0	160	103,0	26,0	6	18,0	195	250	3.3	3
65		20	55	135	112,5	80	68	75	35	4,5	26	32,0	185	120,0	30,5	7	18,0	227	280	3.3	3
75		25	65	160	130,5	95	80	85	40	5,0	30	37,0	210	135,0	35,0	6	20,5	257	350	4.4	3
90		28	75	200	164,5	110	100	100	45	5,5	34	41,0	245	152,0	39,5	8	25,5	293	350	5.5	4
100		30	80	225	164,5	115	113	110	50	6,0	38	46,0	270	169,0	44,0	14	25,5	325	380	5.5	4
110		35	85	255	164,5	125	127	120	55	6,5	42	51,5	295	184,0	48,5	18,5	25,5	355	450	5.5	4
125		40	100	290	210,5	145	147	140	60	7,0	46	55,5	340	208,5	53,0	18,5	30,5	404	500	6.6	5

Slip ring and shiftable linkage

Size	Size of shiftable linkage	Dimensions [mm]																	Max. speed [rpm] for slip ring
		a_1	b_1	c	d_2	d_3	d_5	$e^{1)}$	e_1	F	g_1	L_2	L_3	m	m_1 Min.	m_1 max.	A	B	
38	1	110	50	18	20	11	12	30	25	70	55	320	400	75	180	190	90	114	3280
42	1																		
48	2	140	60	25	25	13,5	17	40	27	97,5	60	430	450	100	240	270	111	151	2550
55	3				30				32,5	120	70	490	600		280	310	140	180	2120
65	3																		
75	3																170	210	1710
90	4	160			35		21	50	37,5	147,5	70	565	750	120	321	365	200	244	1360
100	4																		
110	4																		
125	5				40		25		46	190	80	630	1085		365	410	250	300	855

[1)] With a through base plate the dimension „e“ of the shiftable linkage size 5 has to be increased by at least 10 mm.
Finish bore according to ISO fit H7, feather keyway acc. to DIN 6885 sheet 1 - JS9

Ordering example:

ROTEX® 38	SD	With 1.1 and 1	98 Sh-A	1	Ø38	11	Ø28
Coupling size	Type	with slip ring 1.1 and shifting linkage 1	Spider hardness	Component	Finish bore	Component	Finish bore

ROTEX® FNN
Flexible jaw couplings

For mounting of fan

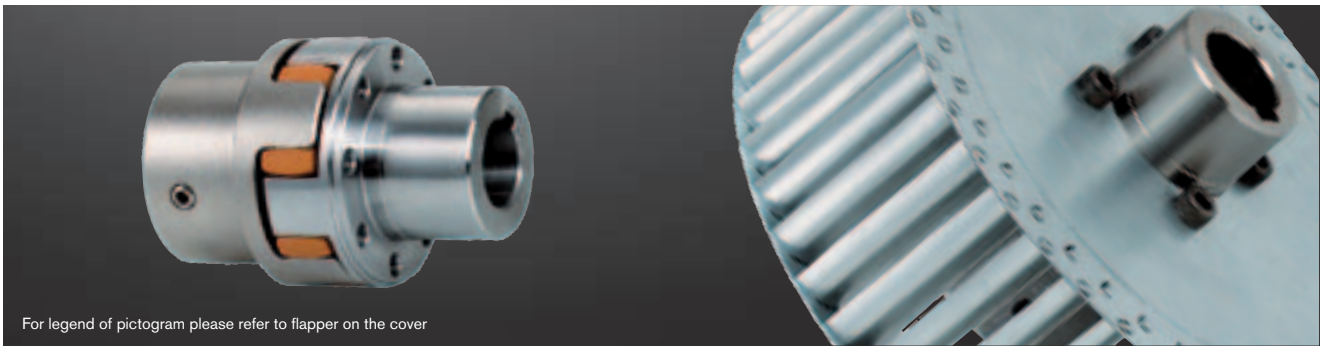

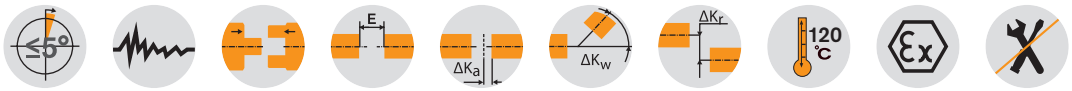

Components

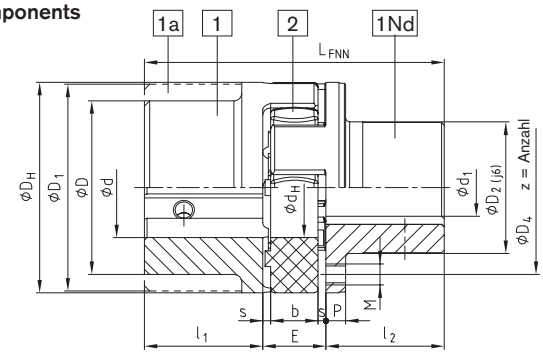

Type FNN

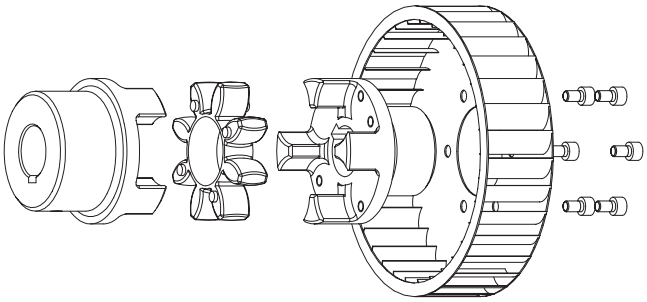

Type FNN with fan (type 1)

ROTEX® Type FNN (No. 021)															
Size	Ød, ØD, ØD1	Max. finish bore Ød1	Dimensions [mm]												
			D_H	D_2	D_4	d_H	E	s	b	l_1;l_2	P	M	z	Pitch	L_{FNN}
28	See jaw couplings on page 34 to 39 Stock programme/basic progr. see page 32 and 33	24	65	40	54	30	20	2,5	15	35	6,5	M6	8	8x45°	90
38		34	80	50	66	38	24	3,0	18	45	7,5	M8	8		114
42		42	95	60	80	46	26	3,0	20	50	9,5	M8	12	16x22,5°	126
48		48	105	68	90	51	28	3,5	21	56	10,5	M8	12		140
55		55	120	78	102	60	30	4,0	22	65	12,5	M10	8	8x45°	160
65		65	135	92	116	68	35	4,5	26	75	13,5	M10	12	16x22,5°	185
75		75	160	106	136	80	40	5,0	30	85	15,5	M12	15	20x18°	210
90		100	200	140	172	100	45	5,5	34	100	18,5	M16	15		245

Other sizes on request

Type 1: Fan screwed on
The ROTEX® coupling can be supplied with the fan screwed on. Specific connection dimensions of customers such as pitch circle of threads, size of threads and number or centering of fans should be mentioned in your inquiry.

Type 2: Fan injection-moulded
Low prices due to production volumes with higher quantities.

Type 3: Fan pressed or glued on
Special surface forming (knurling according to DIN 82) allows the fan to be pressed or glued onto the hub collar.

Ordering example:

ROTEX® 38	FNN	92 Sh-A	1	Ø 38	1Nd	Ø30
Coupling size	Type	Spider hardness	Component	Finish bore	Component	Finish bore

Other types with clamping sets

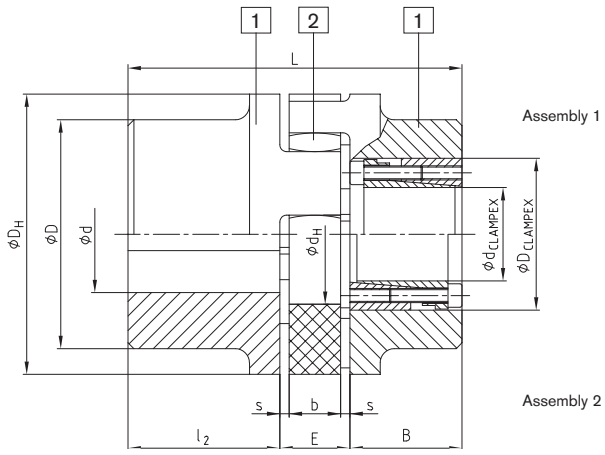

Components

ROTEX® Type No. 001 with clamping set CLAMPEX® KTR 200														
Size	Ød, ØD, ØD1	Hub material	CLAMPEX® KTR 200			B	Abmessungen [mm]							
			Max. size of KTR clamping set dxD	Transmittable torque and axial force										
				T [Nm]	FAX [kN]		l_2	E	s	b	D_H	D	d_H	L
42	See jaw couplings on page 34 to 39 Stock programme/basic programme on page 32 and 33		30x55	769	51	48	50	26	3,0	20	95	—	46	length = l2+ E + B (clamping set)
48			35x60	1197	68	48	56	28	3,5	21	105	—	51	
55		Steel Part 1	45x75	2132	95	59	65	30	4,0	22	120	—	60	
65			45x75	2132	95	59	75	35	4,5	26	135	115	68	
75			50x80	3159	126	59	85	40	5,0	30	160	135	80	
90			65x95	4107	126	59	100	45	5,5	34	200	160	100	
100			65x95	4107	126	59	110	50	6,0	38	225	180	113	
110			70x110	7023	201	70	120	55	6,5	42	255	200	127	
125		GJS Part 1	80x120	8026	201	70	140	60	7,0	46	290	230	147	
140			95x135	11373	239	70	155	65	7,5	50	320	255	165	
160			110x155	16068	292	80	175	75	9,0	57	370	290	190	
180			120x165	21910	365	80	195	85	10,5	64	420	325	220	

ROTEX® Type No. 001 with clamping set CLAMPEX® KTR 200																	
KTR 200 size	Length	Transmittable torque and axial force		Clamping screws DIN EN ISO 4762 – 12.9		KTR 200 size	Length	Transmittable torque and axial force		Clamping screws DIN EN ISO 4762 – 12.9		KTR 200 size	Length	Transmittable torque and axial force		Clamping screws DIN EN ISO 4762 – 12.9	
dxD	B	T [Nm]	F_{ax} [kN]	zxM	T_A [Nm]	dxD	B	T [Nm]	F_{ax} [kN]	zxM	T_A [Nm]	dxD	B	T [Nm]	F_{ax} [kN]	zxM	T_A [Nm]
20x47	48	513	51	6xM6	17	38x65	48	1299	68	8xM6	17	65x95	59	4107	126	8xM8	41
22x47	48	564	51	6xM6	17	40x65	48	1368	68	8xM6	17	70x110	70	7023	201	8xM10	83
24x50	48	616	51	6xM6	17	42x75	59	1990	95	6xM8	41	75x115	70	7524	201	8xM10	83
25x50	48	641	51	6xM6	17	45x75	59	2132	95	6xM8	41	80x120	70	8026	201	8xM10	83
28x50	48	718	51	6xM6	17	48x80	59	3033	126	8xM8	41	85x125	70	10659	251	10xM10	83
30x55	48	769	51	6xM6	17	50x80	59	3159	126	8xM8	41	90x130	70	11286	251	10xM10	83
32x60	48	1094	68	8xM6	17	55x85	59	3475	126	8xM8	41	95x135	66	11373	239	10xM10	83
35x60	48	1197	68	8xM6	17	60x90	59	3791	126	8xM8	41	for further details please see CLAMPEX® catalogue					

Type 4.2 with CLAMPEX® clamping set KTR 250

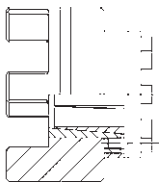

Frictionally engaged, backlash-free shaft-hub-connection for transmitting average torques.

Type 4.3 for CLAMPEX® clamping set KTR 400

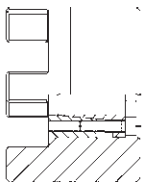

Frictionally engaged, backlash-free shaft-hub-connection for transmitting bigger torques. Maximum size of clamping set depends on the hub collar diameter. Clamping set screw fitting possible both internally and externally. For details of calculation please see CLAMPEX® catalogue.

For CLAMPEX programme please see page 266 to 294

Other types with torque limiters

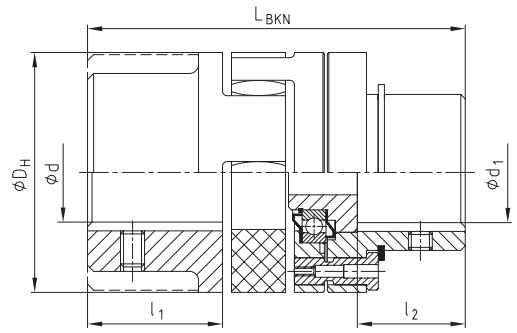

ROTEX® BKN - shear pin coupling, type BKN No. 009

Size	Max. finish bore d	Max. finish bore d1	l1	l2	LBKN	DH	Min. fracture torque [Nm]
28	See shaft coupling on page 34 to 39 Stock progr./basic progr. on page 32/33	28	35	25	101	65	100
38		38	45	35	125	80	190
42		42	50	40	139	95	250
48		48	56	46	153	105	300
55		55	65	55	177	120	400
65		65	75	65	202	135	500
75		75	85	70	230	160	600
90		100	100	85	266	200	700

Modification for customer from the stock programme.
Please mention the fracture torques with your order!
For further details please see dimension sheet No. 5020/000/009-7603

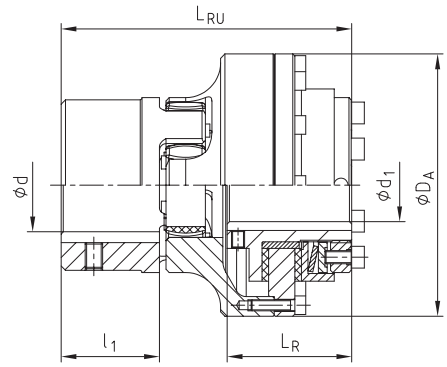

ROTEX® - RUFLEX® - Overload coupling, type No. 070

ROTEX® size	RUFLEX® size	Ratchet torques [Nm]	d	d1 max.	DA	l1	LR	LRU
14	00	0,5 — 5	See shaft coupling on page 34 to 39 Stock progr./basic progr. on page 32/33	10	44	11	31	59
19	0	2 — 20		20 [1]	63	25	33	78
24	01	5 — 70		22	80	30	45	98
28	1	20 — 200		25	98	35	52	113
38	2	25 — 400		35	120	45	57	133
48	3	50 — 800		45	162	56	68	166
75	4	90 — 1600		55	185	85	78	205

[1] Finish bore exceeding ø 19, keyway according to 6885/3

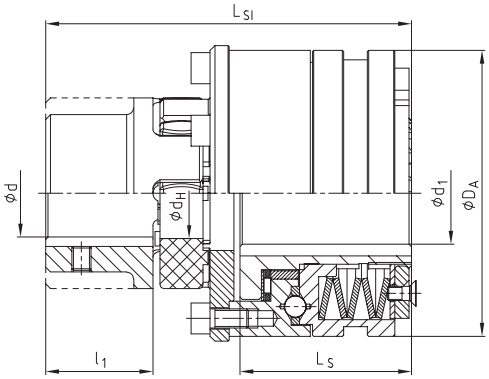

ROTEX® - KTR-SI - Overload coupling, type No. 070

ROTEX® size	KTR-SI type	KTR-SI size	Ratchet torques [Nm]	d	max. d1	DA	l1	LS	LSI
28	DK	2	12-200	See shaft coupling on page 34 to 39 Stock progr./basic progr. on page 32/33	35	100	35	56	124
	SR/SGR	0	5-40		20	55		34,5	102
38	DK	3	25-450		45	120	45	73	155
	SR/SGR	1	12-100		25	82		48	129,5
48	DK	4	50-1000		55	146	56	93,5	194
	SR/SGR	2	25-200		35	100		56	155
55	DK	5	85-2000		65	176	65	107	222,5
	SR/SGR	3	50-450		45	120		73	186
75	DK	—	—		—	—	85	—	—
	SR/SGR	4	100-2000		55	146		93,5	241,5
90	DK	—	—		—	—	100	—	—
	SR/SGR	5	170-3400		65	176		107	275,5

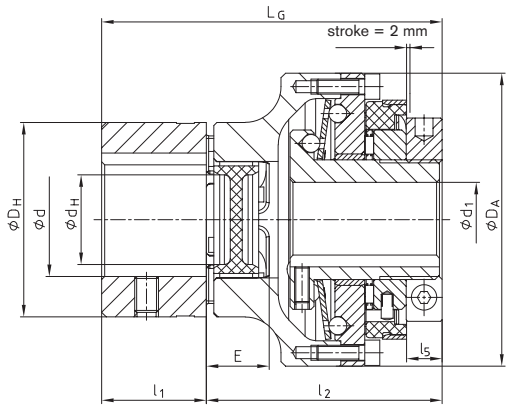

SYNTEX® - backlash-free, torsionally rigid overload coupling with ROTEX® GS

ROTEX® size	SYNTEX® size	SYNTEX® torque range disk spring [Nm]				Max. Bore		DA	DH	dH	E	L	LG	l1	l2	l5
		DK1	DK2	SK1	SK2	d	d1									
24	20	6-20	15-30	10-20	20-65	35	20	80	55	27	18	45	100	30	70	10
28	25	20-60	45-90	25-65	40-100	40	25	98	65	30	20	50	113	35	78	11
38	35	25-80	75-150	30-100	70-180	48	35	120	80	38	24	60	136	45	91	13
48	50	60-180	175-300	80-280	160-400	55	50	162	105	51	28	70	167	56	111	14

Weights and mass moments of inertia

1 1a 2 3b 3Na 4N 6

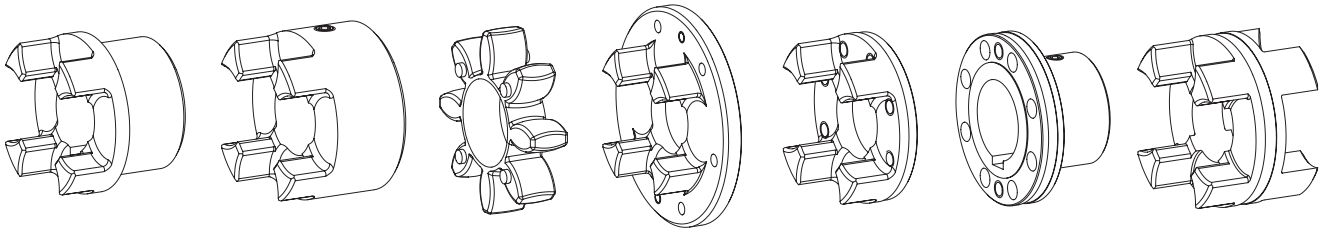

ROTEX® individual components

Size	Standard hub				Large hub			Spider	Driving flange			C-flange	DKM spacer
	Part 1				Part 1a			Part 2	Part 3b	Part 3Na		Part 4N	Part 6
	Alu [kg] [kgm²]	GJL [kg] [kgm²]	GJS [kg] [kgm²]	St [kg] [kgm²]	Alu [kg] [kgm²]	GJL [kg] [kgm²]	St [kg] [kgm²]	Polyurethane (Vulkollan) [kg] [kgm²]	GJS [kg] [kgm²]	St [kg] [kgm²]	GJS [kg] [kgm²]	St [kg] [kgm²]	Alu [kg] [kgm²]
14	–	–	–	–	0,020	–	–	0,0044	–	–	–	–	–
	–	–	–	–	0,000003	–	–	0,0000005	–	–	–	–	–
19	0,064	–	–	–	0,074	–	0,25	0,0056	–	–	–	–	–
	0,00001	–	–	–	0,00002	–	0,00006	0,000001	–	–	–	–	–
24	0,123	–	–	–	0,174	–	0,55	0,014	0,028	0,145	–	0,30	0,14
	0,00004	–	–	–	0,00008	–	0,00023	0,000006	0,00023	0,00007	–	0,00009	0,00006
28	0,200	–	–	–	0,264	–	0,89	0,024	0,54	0,232	–	0,49	0,22
	0,00010	–	–	–	0,00019	–	0,00053	0,000010	0,0007	0,00017	–	0,0002	0,00013
38	0,44	1,16	–	1,6	0,470	1,32	1,74	0,042	0,73	–	0,313	0,87	0,35
	0,00033	0,00086	–	0,00151	0,00046	0,00135	0,00155	0,00003	0,001	–	0,00038	0,0005	0,00035
42	0,69	1,75	–	2,44	0,772	2,05	2,74	0,065	1,26	–	0,608	1,4	0,47
	0,00067	0,00178	–	0,00281	0,00111	0,00291	0,00343	0,00007	0,0032	–	0,00089	0,0011	0,00068
48	0,80	2,44	–	3,34	1,01	2,78	3,72	0,086	1,45	–	0,755	1,92	0,62
	0,0012	0,00308	–	0,00473	0,00174	0,00484	0,00570	0,00013	0,0043	–	0,001358	0,0018	0,0011
55	–	3,68	–	5,05	–	4,08	5,57	0,11	2,58	–	1,243	2,93	0,90
	–	0,00615	–	0,00948	–	0,00926	0,01193	0,00023	0,0105	–	0,002920	0,0037	0,0021
65	–	5,67	–	6,79	–	6,04	8,22	0,17	3,10	–	1,635	4,36	1,31
	–	0,01240	–	0,01516	–	0,01789	0,02079	0,00042	0,0149	–	0,004891	0,0069	0,0039
75	–	8,72	–	10,5	–	9,53	14,3	0,32	4,46	–	2,511	6,80	1,97
	–	0,02644	–	0,03269	–	0,03946	0,05069	0,00116	0,0281	–	0,01050	0,0151	0,0082
90	–	14,8	–	18,7	–	18,2	24,0	0,57	6,94	–	4,151	12,84	3,45
	–	0,06730	–	0,08742	–	0,15086	0,13151	0,00323	0,0651	–	0,02723	0,0448	0,0224
100	–	–	19,7	–	–	–	–	0,81	10,2	–	6,350	16,16	–
	–	–	0,11694	–	–	–	–	0,00588	0,1165	–	0,05273	0,0798	–
110	–	–	27,4	–	–	–	–	1,19	–	–	8,578	21,35	–
	–	–	0,20465	–	–	–	–	0,01097	–	–	0,09121	0,2824	–
125	–	–	42,3	–	–	–	–	1,63	–	–	12,598	34,33	–
	–	–	0,40727	–	–	–	–	0,01972	–	–	0,17469	0,3229	–
140	–	–	58,1	–	–	–	–	2,11	–	–	17,271	48,69	–
	–	–	0,67739	–	–	–	–	0,03129	–	–	0,29247	0,4917	–
160	–	–	84,2	–	–	–	–	3,21	–	–	26,305	71,08	–
	–	–	1,31729	–	–	–	–	0,06323	–	–	0,59436	0,9693	–
180	–	–	118,5	–	–	–	–	5,25	–	–	33,076	109,43	–
	–	–	2,30835	–	–	–	–	0,13789	–	–	0,97394	1,9650	–

Weight and mass moment of inertia each refer to the average finish bore without feather keyway.

Weights and mass moments of inertia

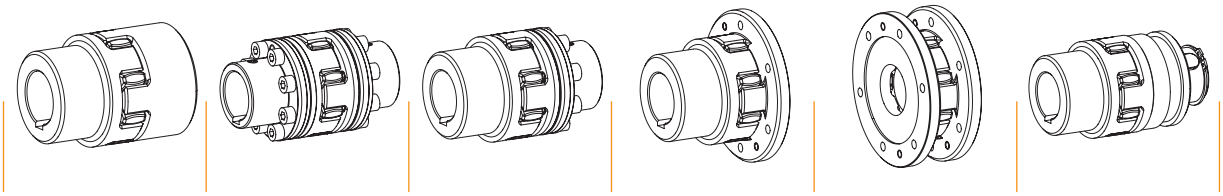

ROTEX® Complete coupling types												
Size	Standard		AFN		BFN		CF		DF		SD	
	Weight [kg]	Mass moment of inertia J [kgm²]	Weight [kg]	Mass moment of inertia J [kgm²]	Weight [kg]	Mass moment of inertia J [kgm²]	Weight [kg]	Mass moment of inertia J [kgm²]	Weight [kg]	Mass moment of inertia J [kgm²]	Weight [kg]	Mass moment of inertiaJ [kgm²]
19	0,51	0,000121	—	—	—	—	0,44	0,00016	0,38	0,00020	0,42	0,00008
24	1,1	0,000466	0,98	0,00036	1,1	0,00041	0,84	0,00047	0,57	0,00047	1,1	0,00046
28	1,8	0,00107	1,6	0,00083	1,7	0,00095	1,5	0,00124	1,1	0,00141	1,9	0,00106
38	2,5	0,00171	2,8	0,00209	2,6	0,00193	1,9	0,00217	1,5	0,00259	3,0	0,00435
42	3,9	0,00476	4,5	0,00472	4,1	0,00419	3,1	0,00513	2,6	0,00662	4,4	0,00804
48	5,3	0,00805	5,9	0,00736	5,5	0,00684	3,9	0,00755	3,0	0,00881	6,2	0,00223
55	7,9	0,01564	8,9	0,01480	8,3	0,01369	6,4	0,01692	5,3	0,02131	9,8	0,0166
65	11,9	0,03071	12,9	0,0266	12,3	0,0259	8,9	0,02780	6,4	0,003037	14,9	0,0326
75	18,6	0,06706	20,6	0,0601	19,3	0,0572	13,5	0,0557	9,2	0,05741	23,2	0,0706
90	33,6	0,22139	37,8	0,1718	34,2	0,1551	22,3	0,1356	14,5	0,1333	40,5	0,1891
100	40,2	0,23976	49,6	0,3068	45,2	0,2737	30,9	0,2401	21,2	0,2394	46,7	0,2467
110	56,0	0,42027	67,5	0,5385	61,7	0,4793	42,9	0,4324	29,8	0,4446	61,5	0,4186
125	86,2	0,83426	102,6	1,0485	94,4	0,9413	64,4	0,8187	42,2	0,8031	96,8	0,8497
140	118,3	1,38607	141,2	1,743	129,7	1,564	90,4	1,4221	62,5	1,4580	127,8	1,368
160	171,6	2,69781	210,3	3,517	190,9	3,107	127,6	2,589	83,6	2,4805	190,3	2,723
180	242,25	4,75449	306,6	6,582	274,4	5,668	175,1	4,448	107,9	4,141	262,2	4,810

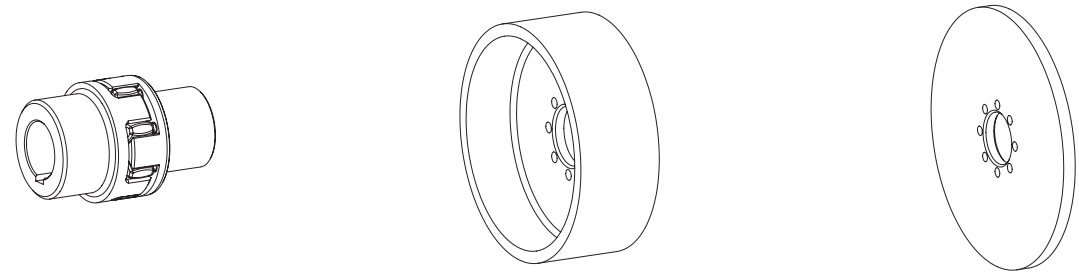

BTAN/SBAN without drum/disk		
Size	Weight [kg]	Mass moment of inertia J [kgm²]
28	0,90	0,0004
38	2,10	0,0014
42	3,24	0,0031
48	4,41	0,0053
55	6,60	0,0105
65	10,1	0,0209
75	15,4	0,0442
90	27,6	0,1224
100	36,9	0,2074
110	50,9	0,3665
125	79,1	0,7349
140	109,0	1,2292
160	161,9	2,4569
180	232,9	4,4967

Brake drum for BTAN 1)		
Brake drum ØDB x B	Weight [kg]	Mass moment of inertia J [kgm²]
160 x 60	2,12	0,01
200 x 75	3,45	0,03
250 x 95	6,87	0,08
315 x 118	14,95	0,28
400 x 150	31,20	0,89
500 x 190	60,00	2,70
630 x 236	112,00	8,01
710 x 265	161,00	14,9
800 x 300	202,00	27,2

Brake disk for SBAN 1)		
Brake disk ØA x GS	Weight [kg]	Mass moment of inertia J [kgm²]
200 x 12,5	2,928	0,015367
250 x 12,5	4,662	0,037584
315 x 16	8,618	0,111829
400 x 16	15,230	0,315206
500 x 16	23,964	0,769963
630 x 20	47,716	2,426359
710 x 20	60,934	3,915100
800 x 25	94,913	7,878998
900 x 25	118,954	12,609089
1000 x 25	148,240	19,234941

Technical data

POLY-NORM® Technical data

Size	Torque [Nm]			Max. speed [1/min] with V=35 m/s	Twist angle with		Torsion spring stiffness $C_{dyn.}$ [Nm/rad]				Max. permissible displacement [mm] [1]		
	Rated torque T_{KN}	Maximum torque $T_{Kmax.}$	Vibratory torque T_{KW}		T_{KN}	$T_{Kmax.}$	1.0 T_{KN}	0.75 T_{KN}	0.5 T_{KN}	0.25 T_{KN}	axial ΔKa	radial ΔKr	angular ΔKw
28	40	80	16	9650	4,5	6,0	5200	3318	1867	897	± 1,0	0,20	1,2
32	60	120	24	8550			7820	4989	2821	1349	± 1,0	0,25	1,4
38	90	180	36	7650			13540	8639	4885	2336	± 1,0	0,25	1,5
42	150	300	60	6950			26250	16748	9471	4528	± 1,0	0,25	1,7
48	220	440	88	6300	4,0	5,5	29896	19074	10786	5157	± 1,5	0,30	1,8
55	300	600	120	5650			38500	24563	13891	6641	± 1,5	0,30	2,0
60	410	820	164	5150			67600	43129	23200	11661	± 1,5	0,30	2,2
65	550	1100	220	4750			81800	52188	26994	14111	± 1,5	0,35	2,4
75	850	1700	340	4200			122900	78410	40557	21200	± 1,5	0,40	2,7
85	1350	2700	540	3650	2,5	3,5	243045	155063	74858	41925	± 1,5	0,40	3,0
90	2000	4000	800	3300			361571	230682	111364	62371	± 1,5	0,45	3,4
100	2900	5800	1160	2950			548200	349752	168846	94565	± 3,0	0,50	3,9
110	3900	7800	1560	2650			792300	505487	244028	136672	± 3,0	0,60	4,3
125	5500	11000	2200	2350			1023240	652827	315158	176509	± 3,0	0,60	4,8
140	7200	14400	2880	2100			1640430	1046594	508533	282974	± 3,0	0,60	5,5
160	10000	20000	4000	1900			2090930	1334013	648188	360685	± 3,0	0,65	6,1
180	13400	26800	5360	1650			2670700	1703907	827917	460696	± 3,0	0,65	6,0
200	19000	38000	7600	1450							± 4,0	0,65	7,8
220	30000	60000	12000	1300							± 4,0	0,70	8,7
240	43000	86000	17200	1200			on request				± 4,0	0,70	9,6
260	55000	110000	22000	1000							± 4,0	0,85	11,3
280	67000	134000	26800	950							± 4,0	0,95	12,2

[1] Displacement with n = 1500 rpm

Radial and angular displacements may occur simultaneously. The combined sum of displacements must not exceed the values listed in the table . If requested, coupling is dynamically balanced (semi-key balancing G 6.3 with 1500 rpm). For circumferential speeds exceeding V = 20 m/s, dyn. balancing is recommended.

Axial displacement ΔK_a

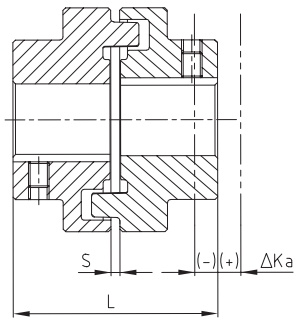

$L_{max.}/min = L + \Delta Ka$ [mm]

Radial displacement ΔK_r

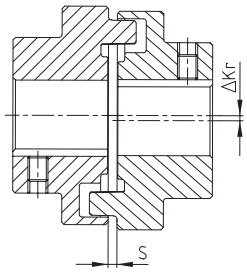

Angular displacement ΔK_W

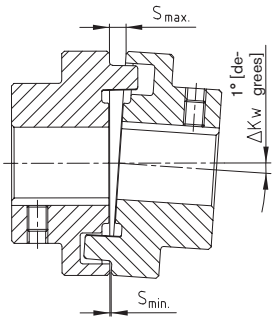

$\Delta Kw = S_{max.} - S_{Min.}$ [mm]

Assembly instructions

With assembly the coupling halves must be mounted such that the coupling and shaft are flush. Alignment has to be done such that the radial and angular displacement is as small as possible. The service life of coupling and bearings is extended by accurate alignment. Steps must be taken to ensure that the alignment will not change during all operating conditions. Shaft displacement which cannot be avoided must not exceed the figures specified in the table. Winkeliger und radialer Versatz können zugleich auftreten. The combined sum of displacements must not exceed the values listed in the table . See KTR mounting instructions, KTR standard 49510 at our homepage www.ktr.com.

General information about the elastomer

Material/Hardness	Perbunan [NBR]/78 Shore-A
Permanent temperature range [°C]	-30 to + 80
Max. temperature (short time) [°C]	-50 to + 120
Operating range	General engineering
	Pump industry
	ATEX applications
	Chemical industry
	Standard applications of average elasticity
Resistant to	Gasoline, diesel
	Acids, bases
	Tropics
	(Salt) water (hot/cold)
	Oils, greases
	Propane, butane
	Natural gas, city gas

Elastomer ring NBR 78 Shore-A

Elastomer ring Viton [FKM] 60 Shore-A for the high-temperature range on request

Selection of standard IEC motors

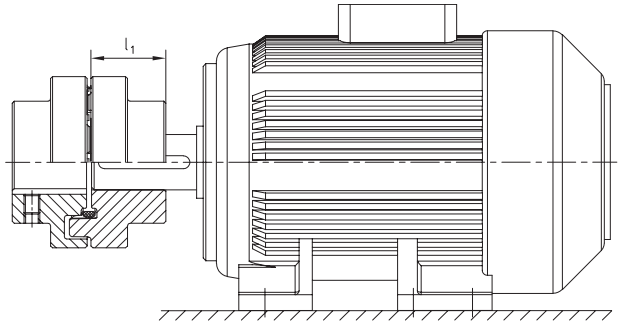

POLY-NORM®-Couplings for standard IEC motors, protection IP 54/IP 55 (elastomer ring 78 Shore-A)

A. C. motor 50 Hz			Motor output n= 3000 rpm 2 poles		POLY®-NORM coupling size	Motor output n= 1500 rpm 4 poles		POLY®-NORM coupling size	Motor output n= 1000 rpm 6 poles		POLY®-NORM coupling size	Motor output n= 750 rpm 8 poles		POLY®-NORM coupling size
Size	Shaft end dxl [mm]													
	2-pole	4, 6, 8 pole	Output P [kW]	Torque T [Nm]		Output P [kW]	Torque T [Nm]		Output P [kW]	Torque T [Nm]		Output P [kW]	Torque T [Nm]	
56	9 x 20		0,09	0,32		0,06	0,43		0,037	0,43				
			0,12	0,41		0,09	0,64		0,045	0,52				
63	11 x 23		0,18	0,62		0,12	0,88		0,06	0,7				
			0,25	0,86		0,18	1,3		0,09	1,1				
71	14 x 30		0,37	1,3		0,25	1,8		0,18	2		0,09	1,4	
			0,55	1,9		0,37	2,5		0,25	2,8		0,12	1,8	
80	19 x 40		0,75	2,5	28/32	0,55	3,7	28/32	0,37	3,9	28/32	0,18	2,5	28/32
			1,1	3,7		0,75	5,1		0,55	5,8		0,25	3,5	
90S	24 x 50		1,5	5		1,1	7,5		0,75	8		0,37	5,3	
90L			2,2	7,4		1,5	10		1,1	12		0,55	7,9	
100L	28 x 60		3	9,8		2,2	15		1,5	15		0,75	11	
						3	20					1,1	16	
112M			4	13		4	27		2,2	22		1,5	21	
132S	38 x 80		5,5	18	38	5,5	36	38	3	30	38	2,2	30	38
			7,5	25										
132M						7,5	49		4	40		3	40	
									5,5	55				
160M	42 x 110		11	36	42	11	72	42	7,5	75	42	4	54	42
			15	49								5,5	74	
160L			18,5	60		15	98		11	109		7,5	100	
180M	48 x 110		22	71	48	18,5	121	48			48			48
180L						22	144		15	148		11	145	
200L	55 x 110		30	97	55	30	196	55	18,5	181	55	15	198	55
			37	120					22	215				
225S	55 x 110	60 x 140				37	240	60			60	18,5	244	60
225M			45	145		45	292		30	293		22	290	
250M	60 x 140	65 x 140	55	177	60	55	356	65	37	361	65	30	392	65
280S	65 x 140	75 x 140	75	241		75	484	75	45	438	75	37	483	75
280M			90	289	65	90	581		55	535		45	587	
315S		80 x 170	110	353		110	707	85	75	727	85	55	712	85
315M			132	423	75	132	849		90	873		75	971	
			160	513		160	1030		110	1070	90	90	1170	90
315L			200	641		200	1290	90	132	1280		110	1420	
		85 x 170			85				160	1550	100	132	1710	100
315			250	802		250	1600	100	200	1930		160	2070	
			315	1010		315	2020		250	2410	110	200	2580	110
355	75 x 140	95 x 170	355	1140	90	355	2280	110	315	3040	125	250	3220	125
			400	1280		400	2570		400	3850		315	4060	
			500	1600		500	3210	125			140			140
400	80 x 170	110 x 210	560	1790	100	560	3580		450	4330		355	4570	
			630	2020		630	4030		500	4810		400	5150	
			710	2270	110	710	4540	140	560	5390	160	450	5790	160
450	90 x 170	120 x 200	800	2560		800	5120	160	630	6060		500	6420	
			900	2880	125	900	5760		710	6830	180	560	7190	180
			1000	3200		1000	6400		800	7690		630	8090	

The coupling selection is based on an ambient temperature up to 30 °C. For the selection there is a minimum safety factor of 2 of the max. coupling torque (TKmax.). A detailed selection is possible according to catalogue, page 11 et seqq. Drives with periodical torque curves must be selected according to DIN 740 part 2. If requested, KTR will perform the selection.
Torque T = rated torque according to Siemens catalogue M 11 · 1994/95..

Two-part

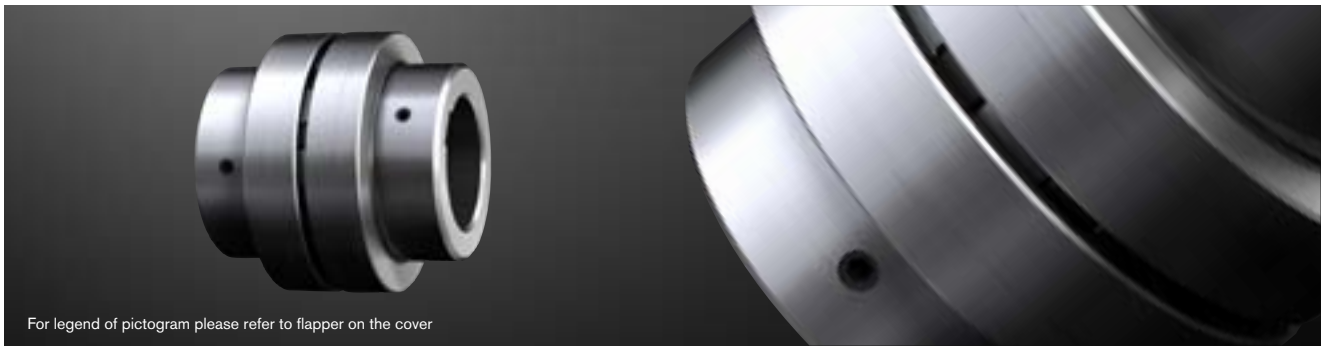

Components

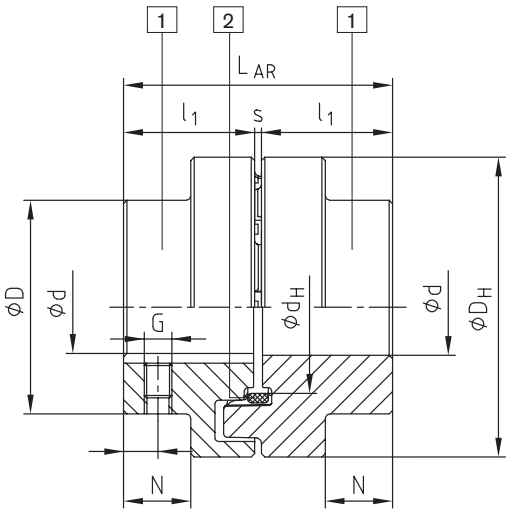

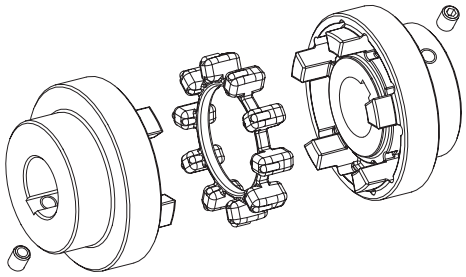

Size 28-125

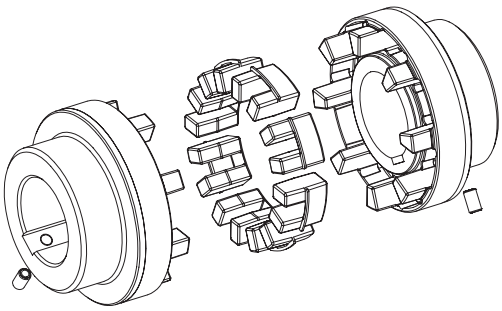

Size 140-280

Components of type AR 1 = standard hub (GJL) 2 = elastomer ring (up to size 180: NBR 78 Sh-A; from size 200: T-PUR® 84 Sh-A)

POLY-NORM® Type AR

Size	Elastomer ring (part 2) 1) torque [Nm]		Max. finish bore Ød 2)	Dimensions [mm]									Mass moment of inertia [kgm²] 3)	AR 3) weight [kg]
				General							Thread for setscrews			
	T_{KN}	$T_{Kmax.}$		L_{AR}	l_1	s	D_H	D	d_H	N	G	t		
28	40	80	30	59	28	3	69	46	36,5	12	M5	7	0,0004	0,9
32	60	120	35	68	32	4	78	53	41,5	14	M8	7	0,0008	1,4
38	90	180	40	80	38	4	87	62	50	19,5	M8	10	0,0016	2,0
42	150	300	45	88	42	4	96	69	55,5	20	M8	10	0,0026	2,7
48	220	440	50	101	48	5	106	78	64	24	M8	15	0,0042	3,7
55	300	600	60	115	55	5	118	90	73	29	M8	14	0,0070	5,5
60	410	820	65	125	60	5	129	97	81	33	M8	15	0,0112	6,9
65	550	1100	70	135	65	5	140	105	86	36	M10	20	0,0174	8,8
75	850	1700	80	155	75	5	158	123	100	42,5	M10	20	0,028	13,5
85	1350	2700	90	175	85	5	182	139	116	48,5	M10	25	0,052	19,5
90	2000	4000	95	185	90	5	200	148	128	49	M12	25	0,090	23,2
100	2900	5800	110	206	100	6	224	165	143	55	M12	25	0,160	31,9
110	3900	7800	50-120	226	110	6	250	185	158	60	M16	30	0,317	38,0
125	5500	11000	55-140	256	125	6	280	210	178	70	M16	35	0,570	55,2
140	7200	14400	65-155	286	140	6	315	235	216	76,5	M20	35	1,030	92,6
160	10000	20000	75-175	326	160	6	350	265	246	94,5	M20	45	1,746	126,9
180	13400	26800	75-200	366	180	6	400	300	290	111,5	M20	50	3,239	181,8
200	19000	38000	85-200	408	200	8	450	335	-	126	M24	50	5,728	263,7
220	30000	60000	95-220	448	220	8	500	370	-	140	M24	50	9,489	355,9
240	43000	86000	105-240	488	240	8	550	405	-	154	M24	50	14,963	466,3
260	55000	110000	115-260	530	260	10	650	440	-	158	M24	60	29,504	672,2
280	67000	134000	125-280	570	280	10	700	475	-	172	M24	60	42,451	836,6

1) Standard material Perbunan (NBR) 78 Shore-A, size 140-280 double tooth elastomers. For selection see page 10 et seqq.
2) Bores H7 with keyway to DIN 6885 sheet 1 [JS9] and thread for setscrews on the feather keyway
3) Referring to average bore

For taper clamping bush

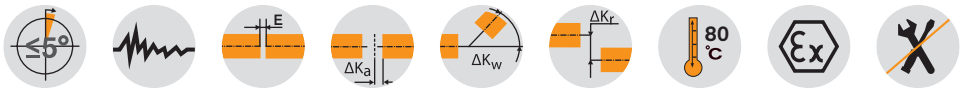

Components

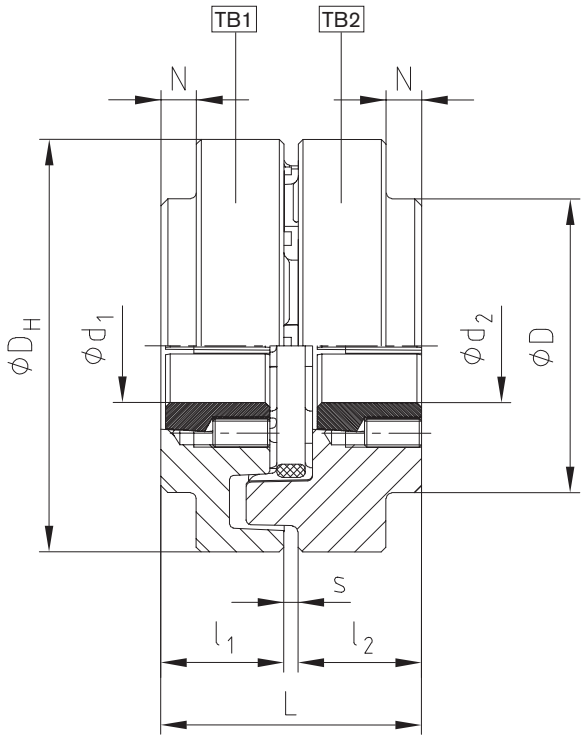

POLY-NORM® for taper clamping bush															
Size	Taper clamping bush	Dimensions [mm]		Fixing screws 1) for taper clamping bush				Size	Taper clamping bush	Dimensions [mm]		Fixing screws 1) for taper clamping bush			
		max. $d_1;d_2$	$l_1;l_2$	Size [inch]	Length [mm]	SW [mm]	T_A [Nm]			max. $d_1;d_2$	$l_1;l_2$	Size [inch]	Length [mm]	SW [mm]	T_A [Nm]
32	1108	25	25,5	1/4"	13	3	5,7	75	2517	60	52,5	1/2"	25	6	49
42	1210	32	31,0	3/8"	16	5	20	85	2517	60	46,5	1/2"	25	6	49
48	1610	40	30,0	3/16"	16	5	20		3030	75	82	5/8"	32	8	90
	1615	40	42,5	3/8"	16	5	20	90	3020	75	52,0	5/8"	32	8	92
60	2012	50	38,5	7/16"	22	6	31	100	3535	90	98,0	1/2"	38	10	115
65	2517	60	62,5	1/2"	25	6	49	125	4040	100	111,5	5/8"	45	12	172

[1] Each 2 fastening screws except for 3535/4040 3 fixing screws.
Coupling type TB1 screwing on cam side - TB2 screwing on collar side
Combination possible! Please order our seperate data sheet M407045.

Ordering example:	POLY-NORM® 38	AR	Ø38	Ø30
	Coupling size	Type	Finish bore	Finish bore

Three-part

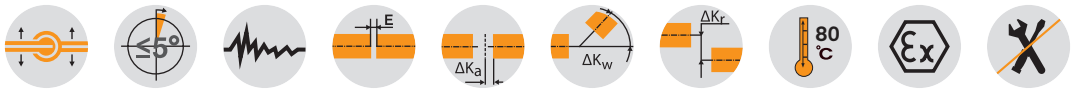

Components

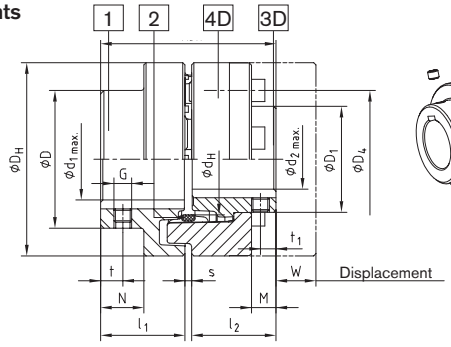

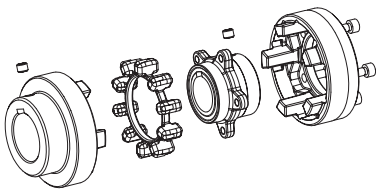

Size 38-125

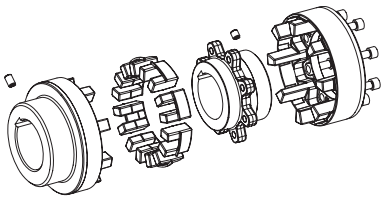

Size 140-280

Components:
Type ADR (Three-part)
1 = Standard hub* (GJL)
2 = Elastomer ring (up to size 180 NBR 78 Sh-A; from size 200: T-PUR® 84 Sh-A)
3D = Flange hub (up to size 180: GJS; from size 200: steel) 4D = cam ring (GJL)
* To be preferably used on driving side

POLY-NORM® Type ADR

Size	Torque of elastomer ring [Nm] 1)		Dimensions [mm]																
			Max. finish bore 2)		General										Thread for setscrew			
	TKN	T_{Kmax}	d1	d2	L_{ADR}	l_1; l_2	s	D_H	D	D_1	d_H	N	M	W	G	t	t_1	TA [Nm]
38	90	180	40	34	80	38	4	87	62	48	50	19,5	11,0	12	M8	10	7	10
42	150	300	45	38	88	42	4	96	69	54	55,5	20	12,0	16	M8	10	7	10
48	220	440	50	44	101	48	5	106	78	62	64	24	13,7	16	M8	15	7	10
55	300	600	60	50	115	55	5	118	90	72	73	29	18,7	15	M8	14	14	10
60	410	820	65	56	125	60	5	129	97	80	81	33	22,2	14	M8	15	15	10
65	550	1100	70	60	135	65	5	140	105	86	86	36	26,7	11	M10	20	20	17
75	850	1700	80	68	155	75	5	158	123	98	100	42,5	27,8	16	M10	20	20	17
85	1350	2700	90	78	175	85	5	182	139	112	116	48,5	33,7	18	M10	25	25	17
90	2000	4000	95	85	185	90	5	200	148	122	128	49	31,5	26	M12	25	25	40
100	2900	5800	110	95	206	100	6	224	165	136	143	55	37,5	28	M12	25	25	40
110	3900	7800	50-120	105	226	110	6	250	185	150	158	60	39,5	30	M16	30	30	80
125	5500	11000	55-140	115	256	125	6	280	210	168	178	70	48,0	35	M16	35	35	80
140	7200	14400	65-155	55-135	286	140	6	315	235	195	216	76,5	47,0	59	M20	35	35	140
160	10000	20000	75-175	65-155	326	160	6	350	265	225	246	94,5	65,0	43	M20	45	45	140
180	13400	26800	75-200	65-175	366	180	6	400	300	255	290	111,5	79,0	33	M20	50	50	140
200	19000	38000	85-200	200	408	200	8	450	335	290	-	126	95	7	M24	50	50	240
220	30000	60000	95-220	220	448	220	8	500	370	320	-	140	103	8	M24	50	50	240
240	43000	86000	105-240	240	488	240	8	550	405	350	-	154	119	1	M24	50	50	240
260	55000	110000	115-260	260	530	260	10	650	440	380	-	158	109	34	M24	60	60	240
280	67000	134000	125-280	280	570	280	10	700	475	410	-	172	109	29	M24	60	60	240

Classification of cylinder screws DIN EN ISO 4762–12.9

Size	M x l [mm]	Number z	Pitch z x angle	D_4 [mm]	T_A [Nm] 3)	Size	M x l [mm]	Number z	Pitch z x angle	D_4 [mm]	T_A [Nm] 3)
38	M6x16	5	5x72	62	10	110	M16x40	8	8x45	183	210
42	M8x16	5	5x72	69	25	125	M20x40	8	8x45	202	410
48	M8x20	6	6x60	78	25	140	M20x50	8	8x45	237	410
55	M8x20	6	6x60	88	25	160	M20x55	9	9x40	267	410
60	M8x20	6	6x60	98	25	180	M20x60	10	10x36	304	410
65	M10x20	6	6x60	104	49	200	M20x60	10	10x36	342	580
75	M10x25	6	6x60	120	49	220	M24x70	10	10x36	378	1000
85	M12x25	6	6x60	138	86	240	M27x70	10	10x36	416	1500
90	M16x30	6	6x60	149	210	260	M30x90	10	10x36	480	2000
100	M16x30	6	6x60	163	210	280	M30x90	10	10x36	520	2000

1) Standard material Perbunan (NBR) 78 Shore-A, size 140-280 double tooth elements. For selection see page 10 et seqq.
2) Bore H7 with feather keyway DIN 6885 sheet 1 [JS9] with thread for setscrews 3) Screw tightening torques acc. to 8.8

Ordering example:

POLY-NORM® 65	ADR	d_1=Ø55	d_2=Ø60
Coupling size	Type	Finish bore	Finish bore

With brake drum/brake disk for brake stop

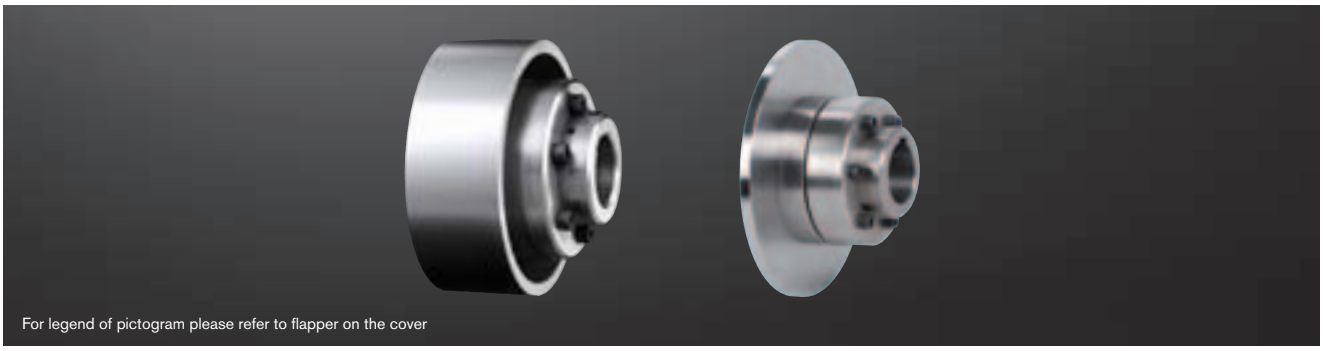

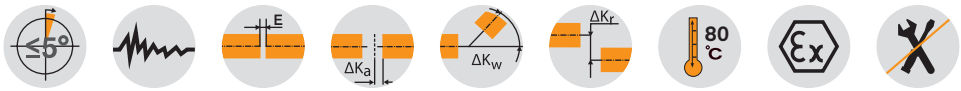

Components

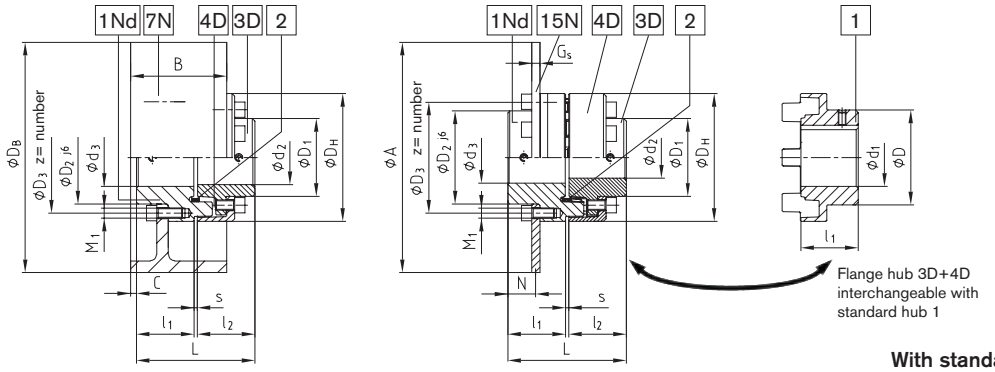

Brake drum type ADR-BTA

Brake disk type ADR-SBA

With standard hub type WAR-BTA or AR-SBA

POLY-NORM® Type AR-BTA, AR-SBA, ADR-BTA and ADR-SBA

Size	Torque of elastomer ring [Nm] 1)		Dimensions [mm]											
	TKN	$TK_{max.}$	D; D_1	Maximum finish bore d_1	d_2	d_3	D_H	D_2	D_3	z	M_1	l_1; l_2	s	L
38	90	180	For dimension ØD, ØD1 please refer to our company catalogue on page 64 and 65	40	34	38	87	61	75	5 x 72°	M6	38	4	80
42	150	300		45	38	42	96	68	82	5 x 72°	M8	42	4	90
48	220	440		50	44	48	106	77	92	6 x 60°	M8	48	5	101
55	300	600		60	50	55	118	88	104	6 x 60°	M8	55	5	115
60	410	820		65	56	60	129	96	114	6 x 60°	M8	60	5	125
65	550	1100		70	60	65	140	104	122	6 x 60°	M10	65	5	135
75	850	1700		80	68	75	158	121	140	6 x 60°	M10	75	5	155
85	1350	2700		90	78	85	182	137	160	6 x 60°	M12	85	5	175
90	2000	4000		95	85	90	200	146	174	6 x 60°	M16	90	5	185
100	2900	5800		110	95	100	224	164	195	6 x 60°	M16	100	6	206
110	3900	7800		50-120	105	50-110	250	184	218	8 x 45°	M16	110	6	226
125	5500	11000		55-140	115	55-125	280	208	245	8 x 45°	M20	125	6	256
140	7200	14400		65-155	55-135	65-140	315	233	276	8 x 45°	M20	140	6	286
160	10000	20000		75-175	65-155	75-160	350	263	308	9 x 40°	M20	160	6	326
180	13400	26800		75-200	65-175	75-180	400	298	349	10 x 36°	M20	180	6	366

POLY-NORM® Type BTA

POLY-NORM® size	38	42	48	55	60	65	75	85	90	100	110	125	140	160	180	Speed rpm with v= 60 m/s 3)
ØDBxB brake drum 2)	Dimensions [mm] C															
160x60	4															7150
200x75	9	8	4													5725
250x95	17	16	20	7	3	0										4575
315x118		25	21	16	12	9	2,5	-3,5								3625
400x150			34	28	25	22	15,5	9,5	9	3						2850
500x190										18	12	-2				2275
630x236												20	13	-4		1800
710x265													24	7	-11	1600

POLY-NORM® Type SBA

POLY-NORM® size	38	42	48	55	60	65	75	85	90	100	110	125	140	160	180	Speed rpm with v= 60 m/s 3)
ØAxG brake disk 2)	Dimensions [mm] N															
200x12,5	13,75															5725
250x12,5	13,75	14,75	18,75													4575
315x16		13	17	22	26	29	35,5									3625
400x16			17	22	26	29	35,5	41,5	42	48						2850
500x16				22	26	29	35,5	41,5	42	48	54	64				2275
630x20										46	52	62	69	86		1800
710x20										46	52	62	69	86	104	1600
800x25										43,5	49,5	59,5	66,5	83,5	101,5	1425
900x25											49,5	59,5	66,5	83,5	101,5	1250

1) Standard material Perbunan [NBR], for selection see page 10 et seqq.
2) Steel 3) Dynamic balancing required

Other sizes on request

Ordering example:

POLY-NORM® 38	ADR-BTA	Ø200 x 75	d_2=Ø32 NnD	d_3=Ø25 NnD
Coupling size	Type	Ø brake drum	Component with finish bore	Component with finish bore

With brake disk for brake stop

Components

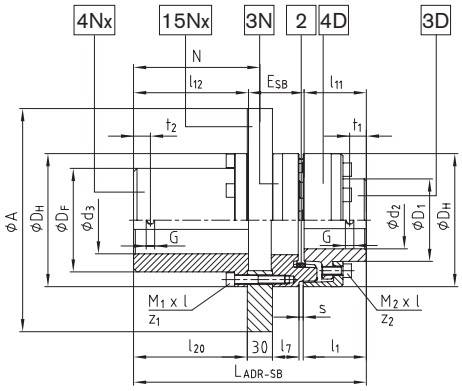

Type ADR-SB with brake disk

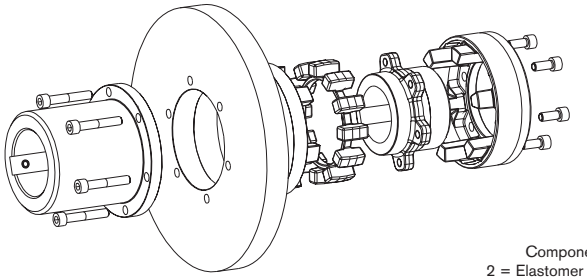

Components
2 = Elastomer ring
3D = Flange hub
4.D = Cam ring
3N = Driving flange
15Nx = Brake disk
4.Nx = Coupling flange

POLY-NORM® Type ADR-SB																			
Size	Torque of elastomer ring [Nm] 1)		Max. finish bore [mm]		Dimensions [mm]												Thread for setscrew		
	TKN	TKmax	d2	d3	DH	N	l2	s	l11	l12	DF	l7	l20	LADR-SB	D1	E	G	t1/t2	TA [Nm]
55	300	600	50	60	118	150	55	5	54,7	136,5	88	24,0	135	249,0	72	57,8	M8	15	10
60	410	820	56	65	129	150	50	5	59,2	136,5	97	25,0	135	255,0	80	59,3	M8	20	10
65	550	1100	60	70	140	150	65	5	63,7	136,5	105	26,5	135	261,5	86	61,3	M10	20	17
75	850	1700	68	80	158	150	75	5	74,0	136,5	123	31,5	135	276,5	98	66,0	M10	20	17
85	1350	2700	78	90	182	150	85	5	84,7	136,5	139	35,0	135	290,0	112	68,8	M10	25	17
90	2000	4000	85	100	200	150	90	5	89,5	136,5	148	39,5	135	299,5	122	73,5	M12	25	40
100	2900	5800	95	110	224	190	100	6	95,5	177,0	165	43,0	175	354,0	136	81,5	M12	25	40
110	3900	7800	105	120	250	190	110	6	105,5	177,0	185	48,0	175	369,0	150	86,5	M16	30	80
125	5500	11000	115	140	280	195	125	6	120,5	182,0	210	53,0	180	394,0	168	91,5	M16	35	80
140	7200	14400	135	160	315	195	140	6	130,0	182,0	235	60,5	180	416,5	195	104,5	M20	35	140
160	10000	20000	155	180	350	195	160	6	150,0	182,0	265	62,5	180	438,5	225	106,5	M20	45	140

Selection of brake disks and cylinder screws							
Size	ØA brake disk [mm]/ 30 mm thick 2) 3)	Cylinder screws DIN EN ISO 4762 for brake disk			Cylinder screws DIN EN ISO 4762 for flange hub/cam ring		
		M1 x l	Number z1	Tightening torque TA [Nm]	M2 x l	Number z2	Tightening torque TA [Nm]
55	250 — 450	M8x20	6	10	M8x20	6	25
60	250 — 500	M8x20	6	10	M8x20	6	25
65	315 — 500	M8x55	6	35	M10x20	6	49
75	315 — 560	M10x60	6	69	M10x25	6	49
85	355 — 560	M10x60	6	69	M12x25	6	86
90	400 — 710	M12x65	6	120	M16x30	6	210
100	400 — 800	M12x65	6	120	M16x30	6	210
110	450 — 900	M16x75	8	295	M16x40	8	210
125	450 — 900	M16x75	8	295	M20x40	8	410
140	500 — 900	M20x80	8	410	M20x50	8	410
160	560 — 900	M20x90	9	410	M20x55	9	410

1) Standard material Perbunan [NBR], for selection see page 10 et seqq.
2) Steel
3) For circumferential speeds exceeding 20 m/s (referring to outside diameter ØDH) dynamic balancing is necessary.
Maximum circumferential speed = 60 m/s (referring to the diameter of brake disk ØA)

Other sizes on request.

Ordering example:

POLY-NORM® 75	ADR-SB	Ø500 x 30	3D d2 - Ø60 NnD	4Nx d3 - Ø70 NnD
Coupling size	Type	Brake disk ØA/width	Component with finish bore	Component with finish bore

Standard drop-out center design coupling

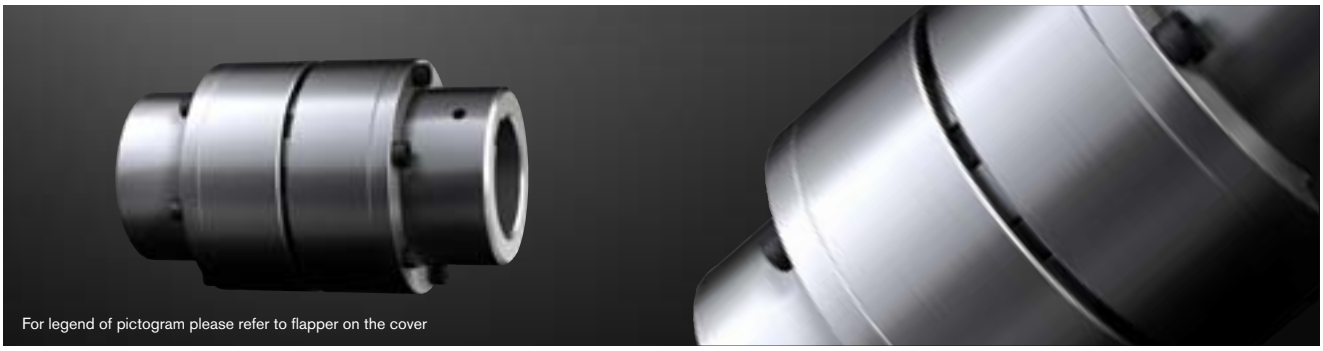

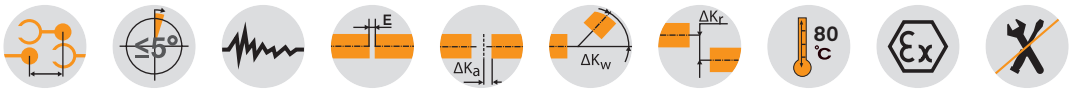

Components

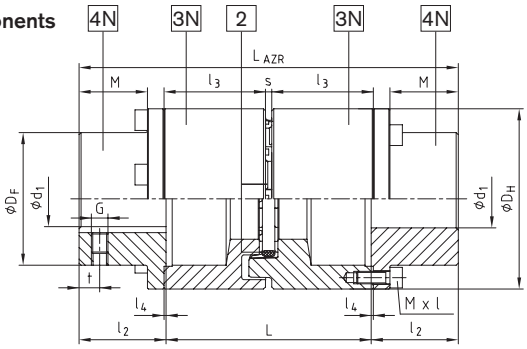

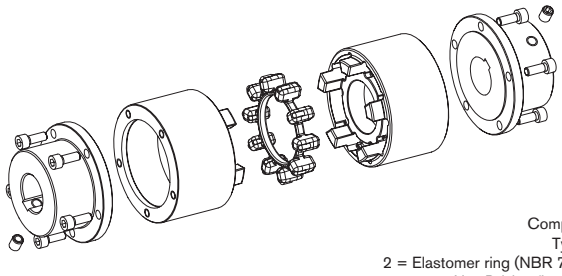

Components:
Type AZR
2 = Elastomer ring (NBR 78 Sh-A)
3N = Driving flange (GJL)
4.N = Coupling flange (Steel)

POLY-NORM® Type AZR

Size	Drop-out center length* L [mm]	Elastomer ring (Teil 2)[1] Torque [Nm]		Max. finish bore [2] Ød1	Dimensions [mm]											Mass moment of inertia [3] [kgm²]	AZR weight [3] [kg]
					General									Thread for set-screw			
		TKN	TKmax		LAZR	l2	l3	s	l4	DH	DF	M	Mxl	TA [Nm]	G	t	
28	100	40	80	30	170	35	49,5	3	1	69	46	26	M6x18	14	M5	7	0,0020	2,4
	140				210		69,5										0,0030	2,9
32	100	60	120	35	170	35	49	4	1	78	53	26	M6x18	14	M8	7	0,0042	3,2
	140				210		69										0,0062	3,9
38	100	90	180	40	184	42	49	4	1	87	62	33	M6x20	14	M8	10	0,0048	4,3
	140				224		69										0,0068	5,1
42	100	150	300	45	190	45	49	4	1	96	69	35	M6x20	14	M8	10	0,0094	5,1
	140				230		69										0,0128	6,0
48	100	220	440	50	204	52	49	5	1,5	106	78	41,5	M6x20	14	M8	15	0,0170	6,6
	140				244		69										0,0216	7,5
	100				210		49										0,0188	9,4
55	140	300	600	60	250	55	69	5	1,5	118	88	43,5	M8x25	35	M8	14	0,0240	10,8
	180				290		89										0,0232	12,2
	100				220		49										0,0326	11,2
60	140	410	820	65	260	60	69	5	1,5	129	97	47,5	M8x25	35	M8	15	0,0414	13,0
	180				300		89										0,0504	14,6
	100				230		49										0,0564	14,0
65	140	550	1100	70	270	65	69	5	1,5	140	105	51,5	M8x25	35	M10	20	0,0730	15,8
	180				310		89										0,0894	17,5
	140				290		69										0,0824	23,2
75	180	850	1700	80	330	75	89	5	1,5	158	123	60,5	M10x30	69	M10	20	0,1008	25,6
	250				400		124										0,1332	29,8
	140				310		69										0,1570	32,1
85	180	1350	2700	90	350	85	89	5	1,5	182	139	69,5	M10x30	69	M10	25	0,1658	35,2
	250				420		124										0,1812	40,7
	140				320		69										0,2466	38,2
90	180	2000	4000	100	360	90	89	5	1,5	200	148	73,5	M12x35	120	M12	25	0,2880	42,2
	250				430		124										0,3566	49,3
	140				340		69										0,3988	50,0
100	180	2900	5800	110	380	100	89	6	2	224	165	83	M12x35	120	M12	25	0,4450	54,8
	250				450		124										0,5465	63,2

[1] Standard material Perbunan [NBR] 78 Shore-A, selection see page 10 et seqq.
[2] Bores H7 with keyway to DIN 6885 sheet 1 [JS9] and thread for setscrews on the feather keyway
[3] Referring to average bore
**For other extendable lengths (L=120/160/195/215) it is possible to combine two driving flanges 3N with various lengths. (As an example: driving flanges POLY-NORM® 85 for extendable length 140 and 250 result in an extendable length of 195 mm (140 mm + 250 mm = 390 mm 390 mm/2 = 195 mm)

Ordering example:

POLY-NORM® 42	AZR	140	Ø38	Ø42
Coupling size	Type	Drop-out center length L	Finish bore	Finish bore

Selection of standard IEC motors

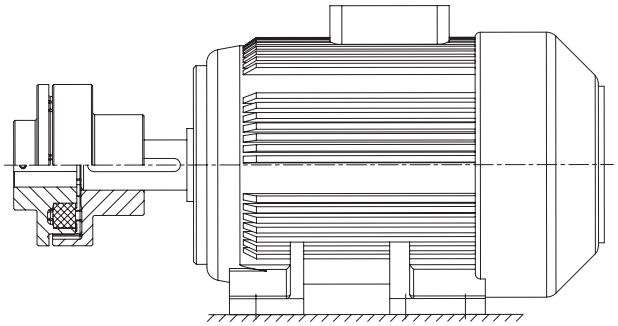

POLY-POLY couplings for standard IEC motors, protection IP 54/IP 55

A. C. motor 50 Hz			Motor output n= 3000 rpm 2 poles		POLY coupling size	Motor output n= 1500 rpm 4 poles		POLY coupling size	Motor output n= 1000 rpm 6 poles		POLY coupling size	Motor output n= 750 rpm 8 poles		POLY coupling size
Size	Shaft end dxl [mm] 2 poles	4, 6, 8 poles	Output P [kW]	Torque T [Nm]		Output P [kW]	Torque T [Nm]		Output P [kW]	Torque T [Nm]		Output P [kW]	Torque T [Nm]	
56	9 x 20		0,09	0,32		0,06	0,43		0,037	0,43				
			0,12	0,41		0,09	0,64		0,045	0,52				
63	11 x 23		0,18	0,62		0,12	0,88		0,06	0,7				
			0,25	0,86	8	0,18	1,3	8	0,09	1,1	8			8
71	14 x 30		0,37	1,3		0,25	1,8		0,18	2		0,09	1,4	
			0,55	1,9		0,37	2,5		0,25	2,8		0,12	1,8	
80	19 x 40		0,75	2,5		0,55	3,7		0,37	3,9		0,18	2,5	
			1,1	3,7		0,75	5,1		0,55	5,8		0,25	3,5	
90S	24 x 50		1,5	5		1,1	7,5		0,75	8		0,37	5,3	
90L			2,2	7,4		1,5	10		1,1	12		0,55	7,9	
100L	28 x 60		3	9,8	9	2,2	15	9	1,5	15	9	0,75	11	9
						3	20					1,1	16	
112M			4	13		4	27		2,2	22		1,5	21	
132S	38 x 80		5,5	18		5,5	36		3	30		2,2	30	
			7,5	25	10			10			10			10
132M						7,5	49		4	40		3	40	
									5,5	55				
160M	42 x 110		11	36		11	72		7,5	75		4	54	
			15	49	12			12				5,5	74	
160L			18,5	60		15	98		11	109	14	7,5	100	14
180M	48 x 110		22	71		18,5	121	14						
180L						22	144		15	148		11	145	
200L	55 x 110		30	97		30	196	15	18,5	181	15	15	198	15
			37	120	15				22	215				
225S	55 x 110	60 x 140				37	240	17				18,5	244	17
225M			45	145		45	292	19	30	293	19	22	290	19
250M	60 x 140	65 x 140	55	177	17	55	356		37	361		30	392	
280S	65 x 140	75 x 140	75	241		75	484	20	45	438	20	37	483	20
280M			90	289	19*	90	581		55	535		45	587	
315S		80 x 170	110	353		110	707	22	75	727	22	55	712	22
315M			132	423	20*	132	849	25	90	873	25	75	971	25
			160	513		160	1030		110	1070		90	1170	
315L			200	641		200	1290	28	132	1280	28	110	1420	28
		85 x 170			22*				160	1550		132	1710	
315			250	802		250	1600		200	1930		160	2070	30
			315	1010		315	2020		250	2410	30	200	2580	
355	75 x 140	95 x 170	355	1140		355	2280	30						35
			400	1280		400	2570		315	3040		250	3220	
			500	1600		500	3210		400	3850	35	315	4060	
400	80 x 170	110 x 210	560	1790		560	3580	35	450	4330		355	4570	
			630	2020		630	4030		500	4810		400	5150	40
			710	2270		710	4540		560	5390	40	450	5790	
450	90 x 170	120 x 210	800	2560		800	5120	40	630	6060		500	6420	
			900	2880		900	5760							
			1000	3200		1000	6400							

The coupling selection is based on an ambient temperature up to + 30 °C. The coupling was selected for normal operation. The respective couplings have a minimum operating factor of f min. = 1,35. Drives with periodical torque courses must be selected according to DIN 740 part 2. If requested, KTR will perform the selection.

Torque T = rated torque according to Siemens catalogue M 11 · 1994/95..

* Dynamic balancing is necessary.

PKZ (two-part) and PKD (three-part)

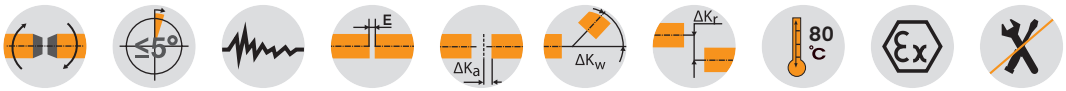

Components

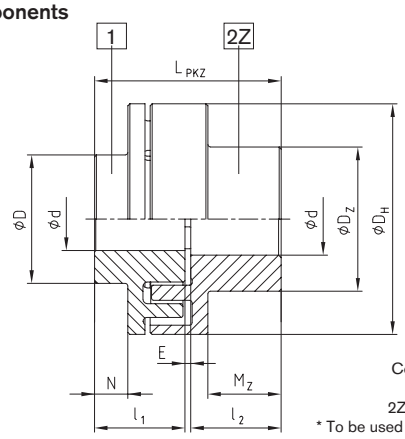

Components: Type PKZ (Z)
1 = Cam section (GJL)
2Z = Pocket section * (GJL)
* To be used preferable on driving side

Type PKZ (Z) – (Size 8 to 30)

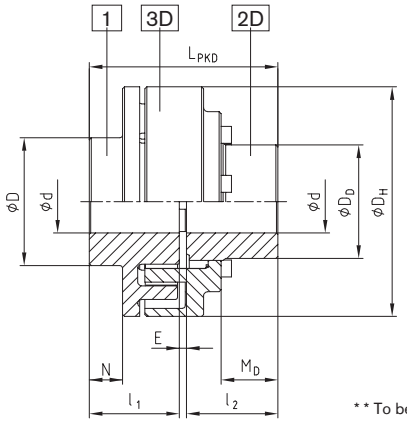

Components type PKD (D)
1 = Cam section * (GJL)
2D = Flange hub (steel)
3D = Cam ring (GJL)
* * To be used preferably on driving side

Type PKD (D) – (Size 15 to 35)

POLY Type PKZ and PKD

Size	Rated torque-1) TKN [Nm]	Max. speed 2) n [rpm]	Max. finish bore Ød [mm]			Dimensions [mm]												Thread for setscrew			Weight 3) [kg]
			Part 1	Part 2Z	Teil 2D	D_H	D	D_Z	D_D	$l_1; l_2$	M_Z	M_D	N	E	D_2	D_4(H7/h7)	L_{PKZ}/L_{PKD}	G	t	T_A [Nm]	
8 (Z)	42	5000	20	28	—	86	43	50	—	35	25	—	3	3	—	—	73	M5	18	2	1,7
9 (Z)	72	5000	28	38	—	97	55	65	—	41	30	—	7	3	—	—	85	M8	23	10	2,7
10 (Z)	100	5000	32	42	—	107	60	70	—	45	35	—	10	4	—	—	94	M8	27	10	3,5
12 (Z)	170	5000	38	48	—	131	70	80	—	55	43	—	12	4	—	—	114	M8	30	10	5,4
14 (Z)	210	4800	45	55	—	142	80	93	—	60	46	—	17	4	—	—	124	M8	10	10	7,6
15 (Z;D)	320	4300	50	60	50	157	90	100	74,5	65	52	33	21	4	90	75	134	M8	15	10	8,6
17 (Z;D)	400	3800	60	65	60	176	100	110	87	70	56	43,5	26	4	106	90	144	M8	15	10	12
19 (Z;D)	660	3500	75	75	70	195	125	125	106	75	64	48	27	4	126	107	154	M8	15	10	18
20 (Z;D)	820	3300	65	75	70	205	115	127	104	80	65	45	23	4	123	105	164	M8	15	10	20
22 (Z)	1100	3000	85	85	—	224	140	140	—	90	75	—	38	4	—	—	184	M10	20	17	25
25 (Z;D)	1600	2700	90	90	95	257	150	150	138	100	84	67	43	5	162	140	205	M12	20	40	35
28 (Z;D)	2500	2350	100	100	110	288	165	165	158	110	90	65	44	5	178	160	225	M12	20	40	53
30 (Z;D)	3950	2200	110	110	110	308	180	180	165	130	108	89	58	5	202	170	265	M16	20	80	66
35 (D)	6100	1850	130	—	145	373	210	—	209	160	—	102	70	5	240	210	325	M16	25	80	125

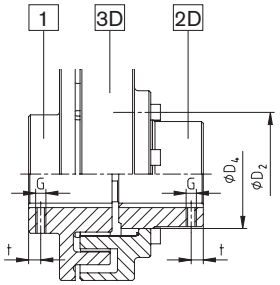

[1] Maximum torque T_{KKmax} = T_{KN} x 2; standard material of elastomer: Perbunan (NBR) 92 Shore-A; standard material of hub: GJL
[2] Speeds for v = 30 m/sec. For circumferential speeds exceeding V = 30 m/s, dyn. we recommend dynamic balancing
[3] Referring to average bore

Ordering example:	POLY	PKD	28	d_1Ø90	d_2Ø80
	Coupling type	Type	Size	Finish bore part 1	Finish bore part 2

Drop-out center design coupling

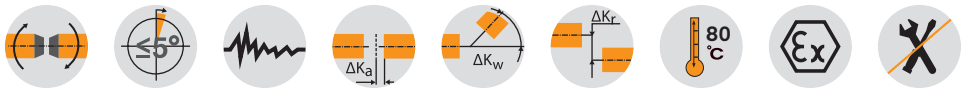

Components

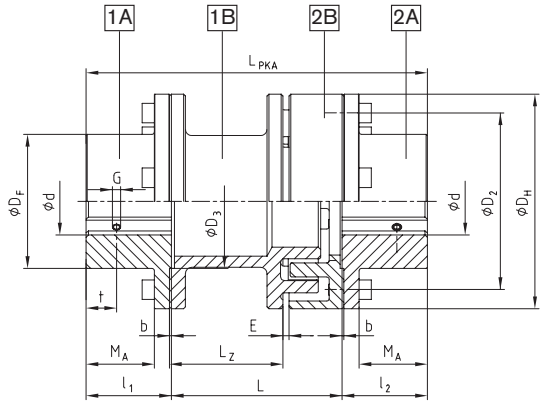

Components: Type PKA
1.A/2A = Coupling flange (steel)
1.B = Spacer (GJL)
2B = Driving flange (GJL)
1.A and 1B to be preferably used drive-sided

POLY Type PKA

Size	Rated torque T_{KN} [Nm]	Max. speed n [rpm]	Max. finish bore d [mm] part 1A/2A	Dimensions [mm]											Thread for setscrew			Weight [kg]
				D_H	D_F	D_2	D_3	l_1, l_2	b	M_A	E	L	L_{PKA}	L_Z	G	t	TA [Nm]	
8	42	5000	38	86	55	70	60	35	1,5	25,5	3	100	170	66	M5	15	2	3,04
9	72	5000	45	97	70	85	70	41	1,5	30,5	3	100	182	63	M8	15	10	4,26
												140	222	103				4,66
10	100	5000	50	107	78	93	80	46	1,5	35,5	4	100	192	61	M8	20	10	5,42
												140	232	101				5,88
12	170	5000	60	131	95	113	90	55	1,5	43,0	4	100	210	55	M8	20	10	9,49
												140	250	95				10,15
14	210	4800	70	142	105	125	100	60	1,5	48,0	4	100	220	54	M8	25	10	11,46
												140	260	94				12,23
15	320	4300	70	157	110	135	110	65	1,5	49,5	4	140	270	93	M8	25	10	15,63
												180	310	133				16,50
17	400	3800	80	176	125	150	110	70	1,5	54,5	4	100	240	53	M8	25	10	18,79
												140	280	93				19,60
												180	320	133				20,41
20	820	3300	100	205	150	175	130	80	2,0	61,0	4	140	300	81	M8	30	10	30,96
												180	340	121				32,18
25	1600	2700	125	257	195	225	150	100	2,0	81,0	5	140	340	81	M12	40	40	54,73
												180	380	121				56,50
												250	450	191				59,60

Ordering example:

POLY	PKA	15	140	Ø38	Ø40
Coupling type	Type	Size	Drop-out center length	Finish bore part 1A	Finish bore part 2A

Displacements / elastomer sets / screws

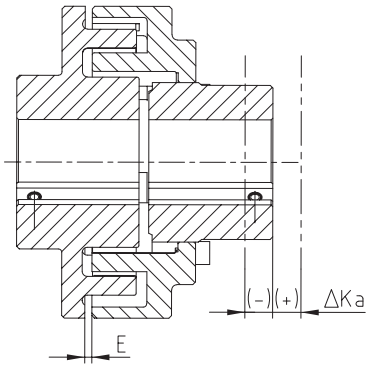

Axial displacement

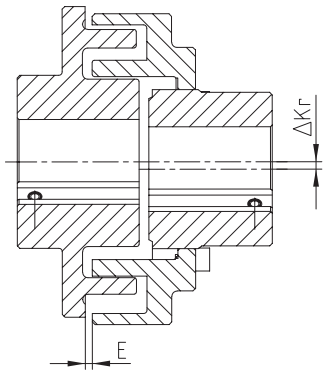

Radial displacement

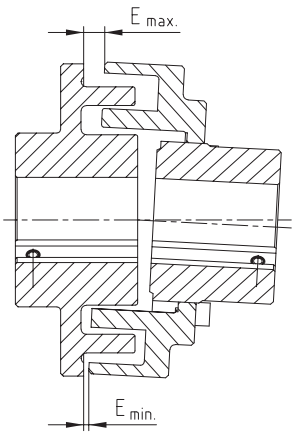

Angular displacement

$\Delta K_W = E_{max.} - E_{Min.}$ [mm]

Radial and angular displacements may occur simultaneously.
The combined sum V = ΔKr + (Emax. – Emin.) must not exceed the values listed in the table .

Displacements [mm]															
Coupling size		8	9	10	12	14	15	17	19	20	22	25	28	30	35
Max. axial displacement ΔKa [mm]		±1	±1	±1	±2	±2	±2	±2	±2	±2	±2	±2	±2	±2	±3
Max. radial displacement ΔKr	n=750 1/min	0,8	0,8	0,8	0,8	0,8	1,0	1,0	1,0	1,0	1,0	1,0	1,0	1,2	1,2
or max. angular displacement	n=1000 1/min	0,7	0,7	0,7	0,7	0,7	0,9	0,9	0,9	0,9	0,9	0,9	0,9	1,1	1,1
ΔKw or sum V	n=1500 1/min	0,5	0,5	0,5	0,5	0,5	0,7	0,7	0,7	0,7	0,7	0,7	0,7	0,7	0,9

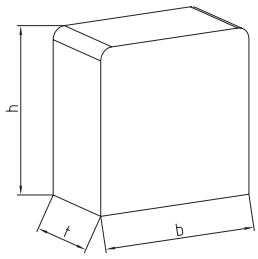

Elastomer sets NBR (building block)															
Coupling size		8	9	10	12	14	15	17	19	20	22	25	28	30	35
Set size		1			2		3		3a	4	3b	4Ü	5	6Ü	7Ü
Number of sets		8	10	10	10	10	12	12	12	12	16	16	16	16	20
Dimensions of	b	18,4			24,9		27,2		27,7	34,9	29,6	35,1	40	43,3	45,7
elastomer sets	t	10			15,3		16,1		18,4	19,6	18,4	22,9	22,2	28,6	25,0
b x t x h [mm]	h	18,9			23,9		24,6		26,8	34,6	29,6	35	40,6	41,1	60,0

Type PKD — Dimensions of cyl. screws DIN EN ISO 4762															
Coupling size		8	9	10	12	14	15	17	19	20	22	25	28	30	35
Screw size	M	—	—	—	—	—	M8	M8	M8	M10	M8	M10	M10	M12	M12
	l	—	—	—	—	—	30	25	25	30	30	30	40	40	55
No. z		—	—	—	—	—	6	6	6	6	8	8	8	8	10
Tightening torque TA [Nm]		—	—	—	—	—	25	25	25	25	25	49	49	86	86
Type PKA — Dimensions of cyl. screws DIN EN ISO 4762															
Screw size	M	M6	M6	M6	M8	M8	M10	M10	—	M10	—	M10	—	—	—
	l	16	18	18	20	20	25	25	—	30	—	30	—	—	—
No. z		4	5	5	5	5	6	6	—	6	—	8	—	—	—
Tightening torque T_A [Nm]		10	10	10	25	25	49	49	—	49	—	49	—	—	—

Standard bores H7 with feather keyway to DIN 6885 sheet 1 [JS9] and threads for setscrews.
Please see our detailed mounting instructions at our website www.ktr.com.

Technical data

REVOLEX® KX-D Technical data											
Size	Torque [Nm] NBR 80 Sh-A			GJL		Steel		Dyn. torsion spring stiffness [Nm/rad]			
	Rated T_{KN}	Max. $T_{Kmax.}$	Vibratory T_{KW}	Max. speed [rpm] with V=35 m/s	Max. bore [mm]	Max. speed [rpm] with V=60 m/s	Max. bore [mm]	0.25xT_{KN}	0.50xT_{KN}	0.75xT_{KN}	1.00xT_{KN}
KX-D 75	3800	7600	1520	–	–	4500	90	$0{,}641x10^6$	$0{,}941x10^6$	$1{,}355x10^6$	$1{,}864x10^6$
KX-D 85	5000	10000	2000	–	–	4175	100	$0{,}834x10^6$	$1{,}224x10^6$	$1{,}763x10^6$	$2{,}425x10^6$
KX-D 95	6600	13200	2640	–	–	3845	110	$1{,}077x10^6$	$1{,}580x10^6$	$2{,}277x10^6$	$3{,}131x10^6$
KX-D 105	8650	17300	3460	2000	110	3475	120	$1{,}404x10^6$	$2{,}060x10^6$	$2{,}967x10^6$	$4{,}081x10^6$
KX-D 120	14110	28220	5640	1800	125	3100	140	$1{,}742x10^6$	$2{,}350x10^6$	$3{,}297x10^6$	$4{,}443x10^6$
KX-D 135	18690	37380	7476	1600	140	2725	160	$2{,}304x10^6$	$3{,}108x10^6$	$4{,}360x10^6$	$5{,}876x10^6$
KX-D 150	23100	46200	9240	1450	160	2500	185	$2{,}880x10^6$	$3{,}885x10^6$	$5{,}450x10^6$	$7{,}345x10^6$
KX-D 170	36900	73800	14760	1250	180	2150	220	$4{,}550x10^6$	$6{,}272x10^6$	$1{,}050x10^7$	$1{,}396x10^7$
KX-D 190	48210	96420	19284	1100	205	1900	245	$5{,}980x10^6$	$8{,}243x10^6$	$1{,}380x10^7$	$1{,}834x10^7$
KX-D 215	61900	123800	24760	1000	230	1725	275	$7{,}634x10^6$	$1{,}052x10^7$	$1{,}762x10^7$	$2{,}342x10^7$
KX-D 240	92030	184060	36812	900	250	1550	310	$1{,}101x10^7$	$2{,}350x10^7$	$3{,}613x10^7$	$4{,}861x10^7$
KX-D 265	121900	243800	48760	800	285	1375	350	$1{,}456x10^7$	$3{,}108x10^7$	$4{,}778x10^7$	$6{,}429x10^7$
KX-D 280	158800	317600	63520	720	315	1225	385	$1{,}896x10^7$	$4{,}047x10^7$	$6{,}221x10^7$	$8{,}371x10^7$
KX-D 305	191060	382120	76424	675	330	1150	405	$2{,}287x10^7$	$4{,}880x10^7$	$7{,}502x10^7$	$1{,}009x10^8$
KX-D 330	251200	502400	100480	625	355	1075	435	$3{,}001x10^7$	$6{,}403x10^7$	$9{,}843x10^7$	$1{,}324x10^8$
KX-D 355	300000	600000	120000	575	380	975	450	$3{,}572x10^7$	$7{,}622x10^7$	$1{,}172x10^8$	$1{,}577x10^8$
KX-D 370	400000	800000	160000	535	450	900	530	$4{,}518x10^7$	$9{,}640x10^7$	$1{,}482x10^8$	$1{,}994x10^8$
KX-D 470	510000	1020000	204000	–	–	855	520	$6{,}325x10^7$	$1{,}350x10^8$	$2{,}075x10^8$	$2{,}208x10^8$
KX-D 520	715000	1430000	286000	–	–	740	acc. to customer's request	$8{,}832x10^7$	$1{,}885x10^8$	$2{,}897x10^8$	$3{,}083x10^8$
KX-D 590	950000	1900000	380000	–	–	660		$1{,}177x10^8$	$2{,}5107x10^8$	$3{,}859x10^8$	$4{,}107x10^8$
KX-D 650	1220000	2440000	488000	–	–	590		$1{,}512x10^8$	$3{,}226x10^8$	$4{,}959x10^8$	$5{,}277x10^8$

If requested, coupling is dynamically balanced (semi-key balancing G 6.3 with speed on request of customer). For circumferential speeds exceeding V = 30 m/s, we would recommend dynamic balancing.

Axial displacement ΔKa

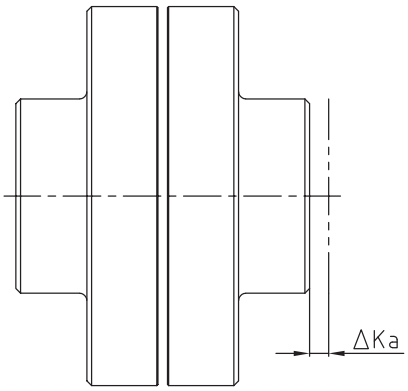

$L_{max./min} = L + \Delta K_a$ [mm]

Radial displacement ΔKr

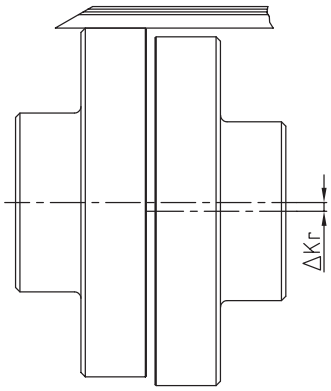

Angular displacement ΔKw

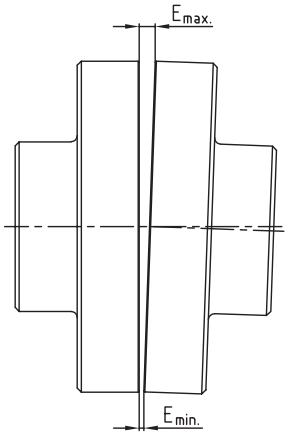

$\Delta K_w = E_{max.} - E_{Min.}$ [mm]

Displacements																						
Size (KX and KX-D)		75	85	95	105	120	135	150	170	190	215	240	265	280	305	330	355	370	470	520	590	650
Max. axial displacements ΔK_a [mm]		±1,5	±1,5	±1,5	±2	±2	±2	±2	±2,5	±2,5	±2,5	±2,5	±2,5	±2,5	±2,5	±4	±4	±4	±4	±4	±4	±4
Max. radial displacement ΔK_r [mm] or max. angular displacements ΔK_w [mm] with speed n	250 rpm	0,95	1,1	1,1	1,2	1,3	1,4	1,5	1,7	1,9	2,0	2,2	2,5	2,7	2,9	3,1	3,3	3,5	3,8	4,4	4,9	5,4
	500 1/min	0,70	0,80	0,80	0,9	0,9	1,0	1,1	1,2	1,3	1,4	1,6	1,7	1,9	2,0	2,2	2,3	2,5	2,8	3,1	3,5	3,8
	750 1/min	0,60	0,65	0,65	0,7	0,8	0,8	0,9	1,0	1,1	1,2	1,3	1,4	1,6	1,7	1,8	1,9	2,0	2,2	2,4	–	–
	1000 1/min	0,50	0,55	0,55	0,6	0,7	0,7	0,8	0,9	0,9	1,0	1,1	1,2	1,4	1,4	1,5	1,7	1,8	–	–	–	–
	1500 1/min	0,40	0,45	0,45	0,5	0,5	0,6	0,6	0,7	0,8	0,8	0,9	1,0	–	–	–	–	–	–	–	–	–
	2000 1/min	0,35	0,40	0,40	0,4	0,5	0,5	0,5	0,6	0,7	–	–	–	–	–	–	–	–	–	–	–	–
	3000 1/min	0,30	0,35	0,35	0,4	0,4	–	–	–	–	–	–	–	–	–	–	–	–	–	–	–	–

Assembly instructions
The above-mentioned permissible displacement figures of the flexible REVOLEX® KX couplings are standard values, considering the coupling load up to the rated torque T_{KN} of the coupling and an ambient temperature of + 30 °C. Care should be taken to maintain the distance dimension E accurately in order to allow for axial clearance of the coupling while in operation. See KTR mounting instructions, KTR standard 49410 at our homepage www.ktr.com.

REVOLEX® KX-D
Flexible pin & bush coupling

Casted material

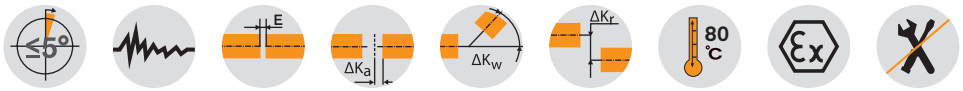

Components

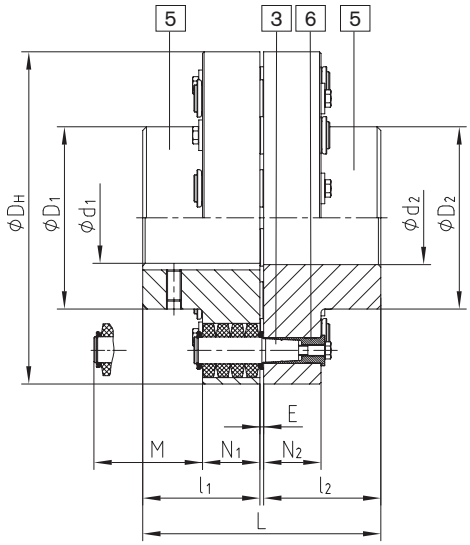

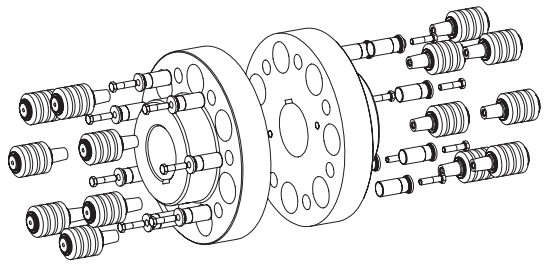

Components type KX-D
5 = Hub part 5
3 = Pins complete
6 = KX-D sleeve (hardened and corrosion-resistant)

REVOLEX® Type KX-D

Size	Torque [1] [Nm]		Max. speed [2] [rpm]	Finish bore [min. - max.]	Dimensions [mm]							Mass moments of inertia [3] [kgm²]	Approx. weight [3] [kg]
	T_{KN}	$T_{Kmax.}$		$d_1; d_2$	L	$l_1; l_2$	E	D_H	$D_1; D_2$	$N_1; N_2$	M*		
KX-D 105	8650	17300	2000	34-110	237	117	3	330	180	56	76	0,907	68
KX-D 120	14110	28220	1800	50-125	270	132	6	370	206	76	100	1,867	108
KX-D 135	18690	37380	1600	70-140	300	147	6	419	230	76	100	3,144	145
KX-D 150	23100	46200	1450	82-160	336	165	6	457	256	76	100	4,573	180
KX-D 170	36900	73800	1250	95-180	382	188	6	533	292	92	130	10,259	291
KX-D 190	48210	96420	1100	110-205	428	211	6	597	330	92	130	16,601	385
KX-D 215	61900	123800	1000	125-230	480	237	6	660	368	92	130	25,495	498
KX-D 240	92030	184060	900	140-250	534	264	6	737	407	122	170	50,147	760
KX-D 265	121900	243800	800	160-285	590	292	6	826	457	122	170	80,796	997
KX-D 280	158800	317600	720	180-315	628	311	6	927	508	122	170	129,979	1301
KX-D 305	191060	382120	675	180-330	654	324	6	991	533	122	170	170,016	1509
KX-D 330	251200	502400	625	200-355	666	330	6	1067	572	122	170	227,451	1755
KX-D 355	300000	600000	575	225-450	721	356	9	1156	610	164	220	415,259	2263
KX-D 370	400000	800000	535	225-530	773	382	9	1250	720	164	220	586,686	2701

* Drop-out center dimension
[1] Standard material NBR 80 Shore-A, please observe selection on page 14 et seqq.
[2] Higher speeds on request.
[3] Relating to max. bore
Finish bore acc. to ISO fit H7, feather keyway acc. to DIN 6885 sheet 1 - JS9.
If requested, coupling is dynamically balanced (semi-key balancing G 6.3 with speed on request of customer). For circumferential speeds exceeding V = 30 m/s, we would recommend dynamic balancing.
= vorgebohrt ab Lager lieferbar

Ordering example:	REVOLEX® KX-D 170	GJL	Ø120	Ø150
	Size and type of coupling	Material	Finish bore	Finish bore

Material steel

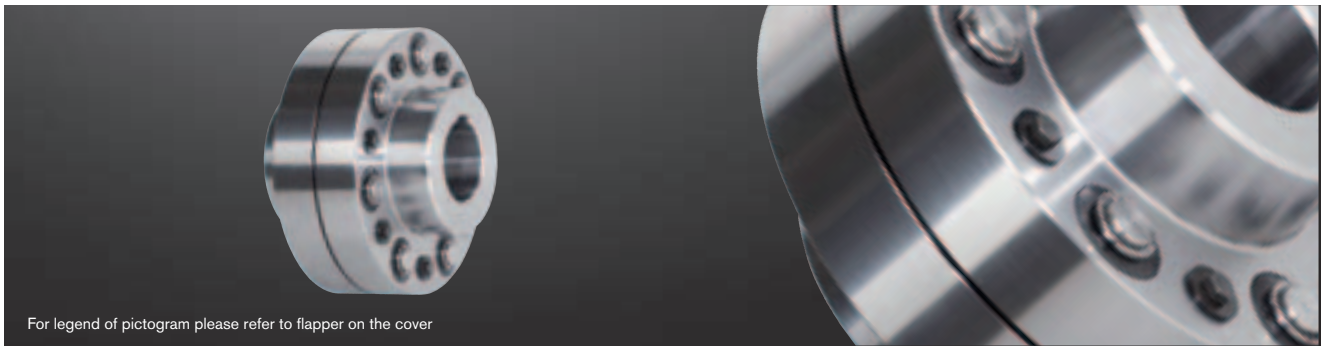

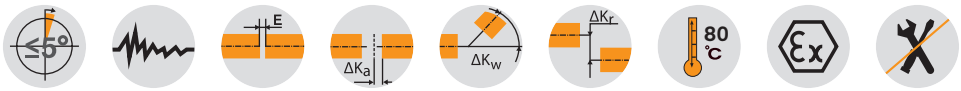

Components

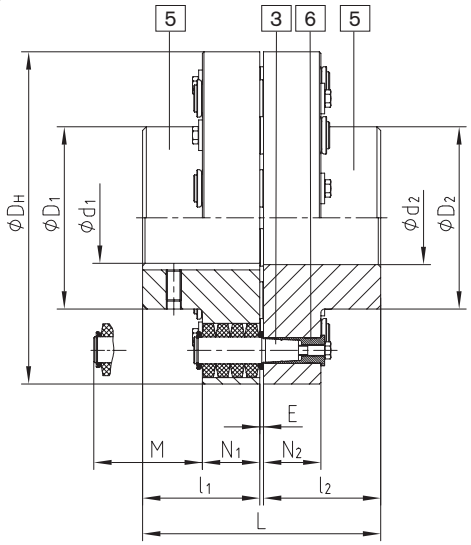

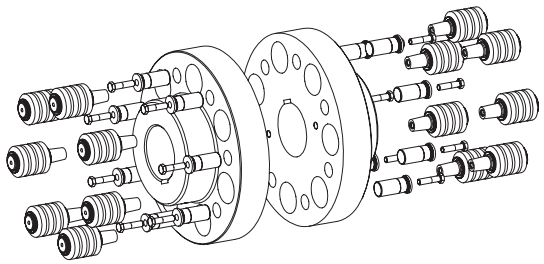

Components
Type KX-D
5 = Hub part 5
3 = Pins complete
6 = KX-D sleeve (hardened and corrosion-resistant)

REVOLEX® Type KX-D

Size	Torque [1] [Nm]		Max. speed [2] [rpm]	Finish bore [min. - max.]	Dimensions [mm]							Mass moments of inertia [3] [kgm²]	Approx. weight [3] [kg]
	TKN	$T_{Kmax.}$		$d_1; d_2$	L	$l_1; l_2$	E	D_H	$D_1; D_2$	$N_1; N_2$	M*		
KX-D 75	3800	7600	4500	0-90	193	95	3	255	136	56	76	0,325	39
KX-D 85	5000	10000	4175	0-100	213	105	3	274	152	56	76	0,440	46
KX-D 95	6600	13200	3825	0-110	227	112	3	298	168	56	76	0,624	56
KX-D 105	8650	17300	3475	0-120	237	117	3	330	180	56	76	0,907	80
KX-D 120	14110	28220	3100	0-140	270	132	6	370	206	76	100	1,867	124
KX-D 135	18690	37380	2725	70-160	300	147	6	419	230	76	100	3,144	165
KX-D 150	23100	46200	2500	82-185	336	165	6	457	256	76	100	4,573	205
KX-D 170	36900	73800	2150	95-220	382	188	6	533	292	92	130	10,259	322
KX-D 190	48210	96420	1900	110-245	428	211	6	597	330	92	130	16,601	431
KX-D 215	61900	123800	1725	125-275	480	237	6	660	368	92	130	25,495	559
KX-D 240	92030	184060	1550	140-310	534	264	6	737	407	122	170	50,147	833
KX-D 265	121900	243800	1375	160-350	590	292	6	826	457	122	170	80,796	1099
KX-D 280	158800	317600	1225	180-385	628	311	6	927	508	122	170	129,979	1436
KX-D 305	191060	382120	1150	180-405	654	324	6	991	533	122	170	170,016	1669
KX-D 330	251200	502400	1075	200-435	666	330	6	1067	572	122	170	227,451	1954
KX-D 355	300000	600000	975	225-450	721	356	9	1156	610	164	220	415,259	2451
KX-D 370	400000	800000	900	225-530	773	382	9	1250	720	164	220	584,686	2925
KX-D 470	510000	1020000	855	240-520	969 [4]	480 [4]	9	1340	705 [4]	164	220	785,489	3631
KX-D 520	715000	1430000	760	240-520 [4]	1089 [4]	540 [4]	9	1540	780 [4]	164	220	1264,725	5155
KX-D 590	950000	1900000	680	260-590 [4]	1212 [4]	600 [4]	12	1735	885 [4]	164	220	2081,885	6895
KX-D 650	1220000	2440000	610	280-650 [4]	1332 [4]	660 [4]	12	1935	975 [4]	164	220	3228,297	8893

* Drop-out center dimension
[1] Standard material NBR 80 Shore-A, for selection see page 14 et seqq. [2] Higher speeds on request. [3] Relating to max. bore [4] Variable according to customer's requests
Finish bore acc. to ISO fit H7, feather keyway acc. to DIN 6885 sheet 1 - JS9.
If requested, coupling is dynamically balanced (semi-key balancing G 6.3 with speed on request of customer). For circumferential speeds exceeding V = 30 m/s, we would recommend dyn. balancing.
= vorgebohrt ab Lager lieferbar

Ordering example:

REVOLEX® KX-D 170	Stahl	Ø120	Ø150
Size and type of coupling	Material	Finish bore	Finish bore

REVOLEX® KX-D SB
Flexible pin & bush coupling

With brake disk

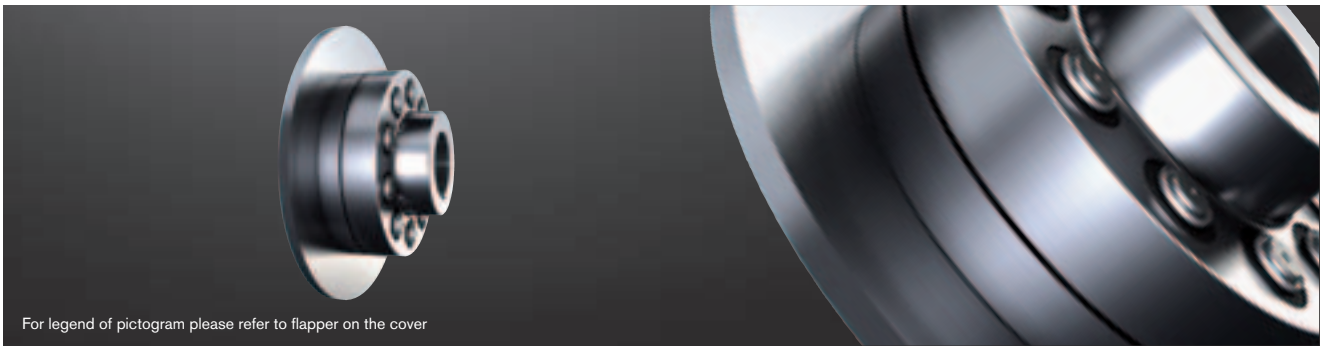

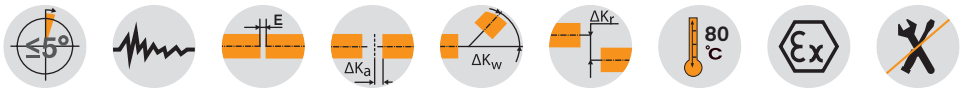

REVOLEX® KX-D Type SB															
Size	Torque [1] [Nm] KX-D		Finish bore KX-D GJL [min. - max.]		Finish bore KX-D [min. - max.]		Dimensions [mm]								
	TKN	$T_{Kmax.}$	d_1	d_2	GJL d_1; d_2	Steel d_1; d_2	L	l_1; l_2	E	D_H	D_1	N_1	N_2	N_3	M*
105	8650	17300	34-110	34-125	34-110	0-120	237	117	3	330	180	56	29	55	76
120	14110	28220	50-125	50-145	50-125	0-140	270	132	6	370	206	76	45	75	100
135	18690	37380	70-140	70-150	70-140	70-160	300	147	6	419	230	76	45	75	100
150	23100	46200	82-160		82-160	82-185	336	165	6	457	256	76	45	75	100
170	36900	73800	95-180		95-180	95-220	382	188	6	533	292	92	62	91	130
190	48210	96420	110-205		110-205	110-245	428	211	6	597	330	92	62	91	130
215	61900	123800	125-230		125-230	125-275	480	237	6	660	368	92	62	91	145
240	92030	184060	140-250		140-250	140-310	534	264	6	737	407	122	75	121	167

Selection of coupling/brake disk dimension “N”						
Size	Brake disk ØA x b[3]					
	Ø560x30	Ø630x30	Ø710x30	Ø800x30	Ø900x30	Ø1000x30
	KX-D	KX-D	KX-D	KX-D	KX-D	KX-D
105	47	47				
120	42	42				
135		57	57			
150			75	75		
170			82	82		
190				105	105	
215				131	131	131
240				128	128	128

* Drop-out center dimension
[1] Standard material NBR 80 Shore-A, for selection see page 14 et seqq. [2] Higher speeds on request.
[3] Maximum circumferential speed = 60 m/s referring to maximum outside diameter.
Finish bore according to ISO fit H7, feather keyway acc. to DIN 6885 sheet 1 - JS9.
If requested, coupling is dynamically balanced (semi-key balancing G 6.3 with speed on request of customer). For circumferential speeds exceeding 30 m/s (referring to outside diameter ØA) we would recommend dynamic balancing.

Ordering example:	REVOLEX® KX 170	SB	Ø710x30	1 - Ø120	2SB - Ø150
	Size and type of coupling	Type	Brake disk	Finish bore	Finish bore

Components

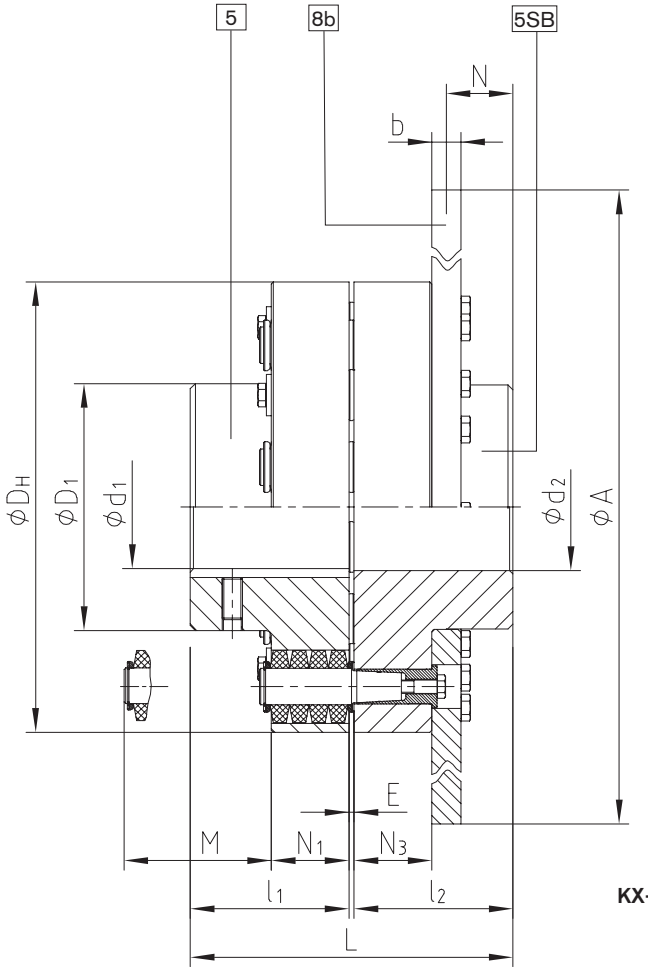

KX-D

Technical data of pins

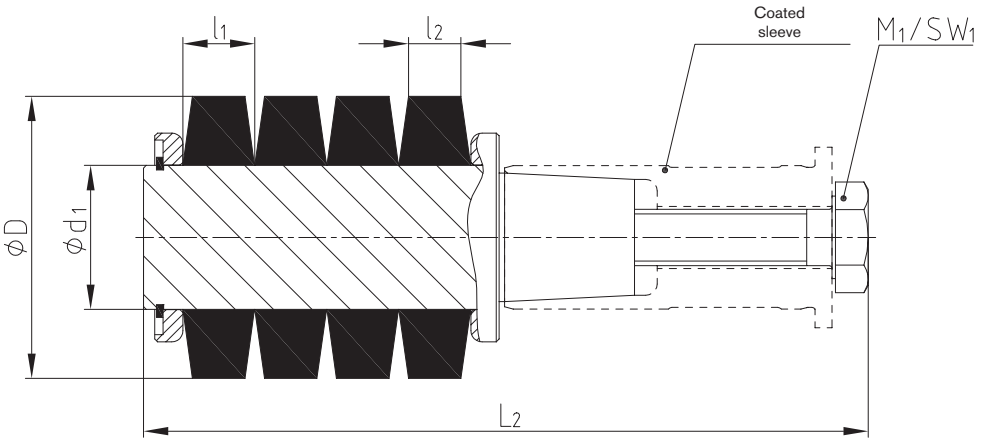

Taper pin design B

KX-D

Technical data											
Size	Pin		Component 3.2			Component 3.1b			Component 3.4b		Tightening torque T_A [Nm]
	Size	No. z	Elastomer ring NBR 80 Shore A			Pin			Screw DIN 931/933		
		KX-D	D	l_1	l_2	d_1	L_1	L_2	M_1	SW_1	
75	3	10									
85	3	12	50,0	12,7	9,0	25,40	103	129	M10	16	67
95	3	14									
105	3	16									
120	4	14									
135	4	16	63,0	17,8	12,5	30,60	147,5	178	M12	18	115
150	4	18									
170	5	14									
190	5	16	85,5	22,9	15,2	43,20	191	220	M16	24	290
215	5	18									
240	6	14									
265	6	16									
280	6	18	113,7	30,5	20,3	58,40	244	290	M24	36	970
305	6	20									
330	6	24									
355	7	16									
370	7	20	150	41	28	75	–	387	M30	46	1950
470	7	22									

General information on the elastomer rings			
Material	Perbunan (NBR)	Natural rubber (NR)	Perbunan (NBR)
Spider hardness	80 Shore-A	80 Shore-A	80 Shore-A
Permanent temperature range [°C]	- 30 to +80	- 50 to +70	- 30 to +80
Max. temperature (short-term) [°C]	- 50 to +120	–	–
Colour	black	black	blue
Operating range	STANDARD	Temperatures below zero	Electrically insulating and backlash-free, e. g. ropeway drives

Assembly/disassembly

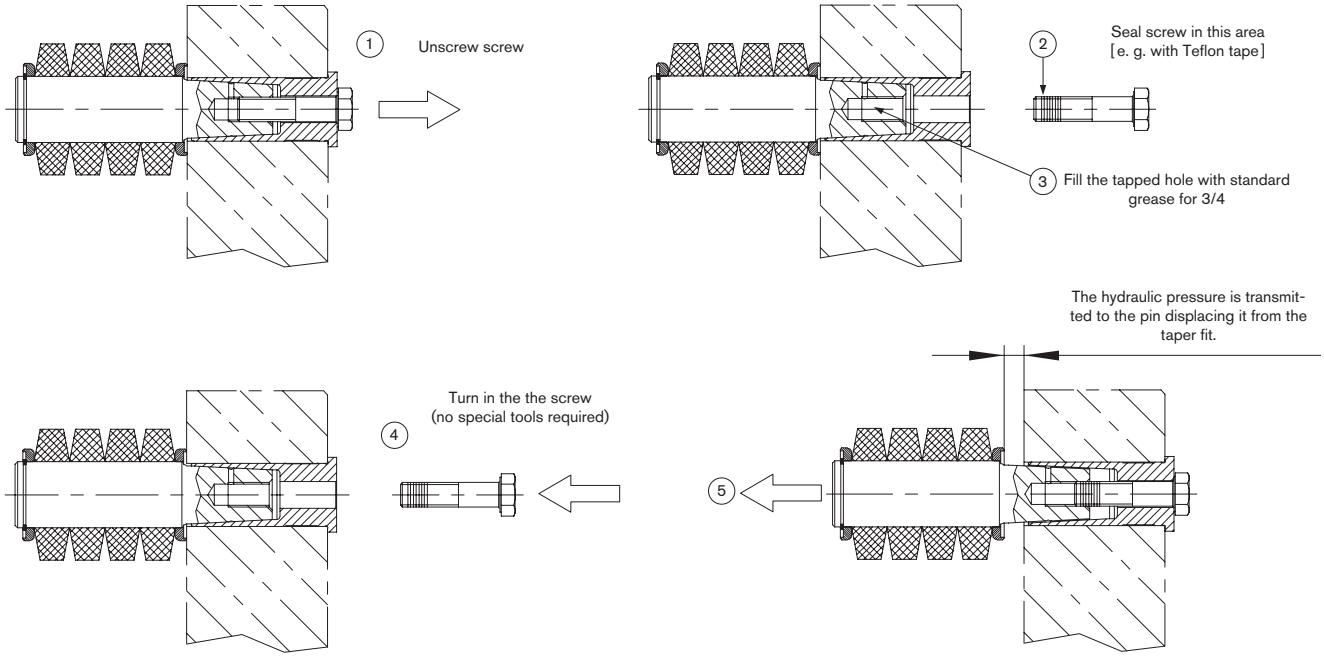

Other types

Type AB
with limited axial backlash

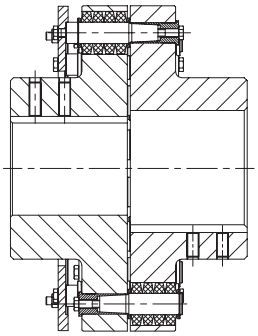

Intermediate shaft type with RADEX®-N

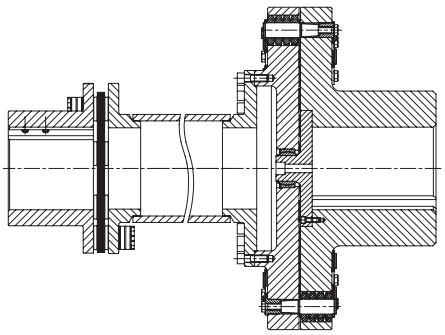

Backlash-free type

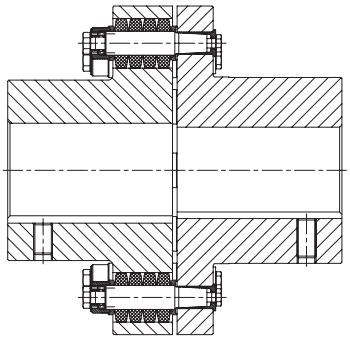

Type KX-D SD
shiftable with shiftable linkage

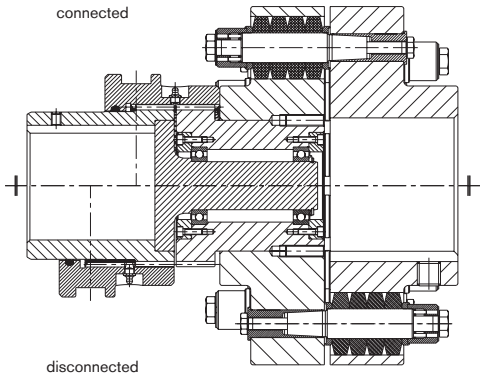
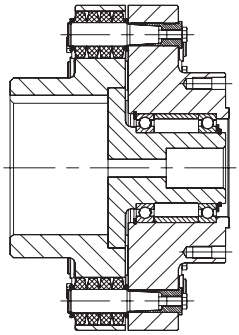
Type KX-D
with cardan shaft connection