REVOLEX® KX / KX-D
Type AB with limitation of axial backlash

Flexible pin & bush couplings types
KX and KX-D and their combinations

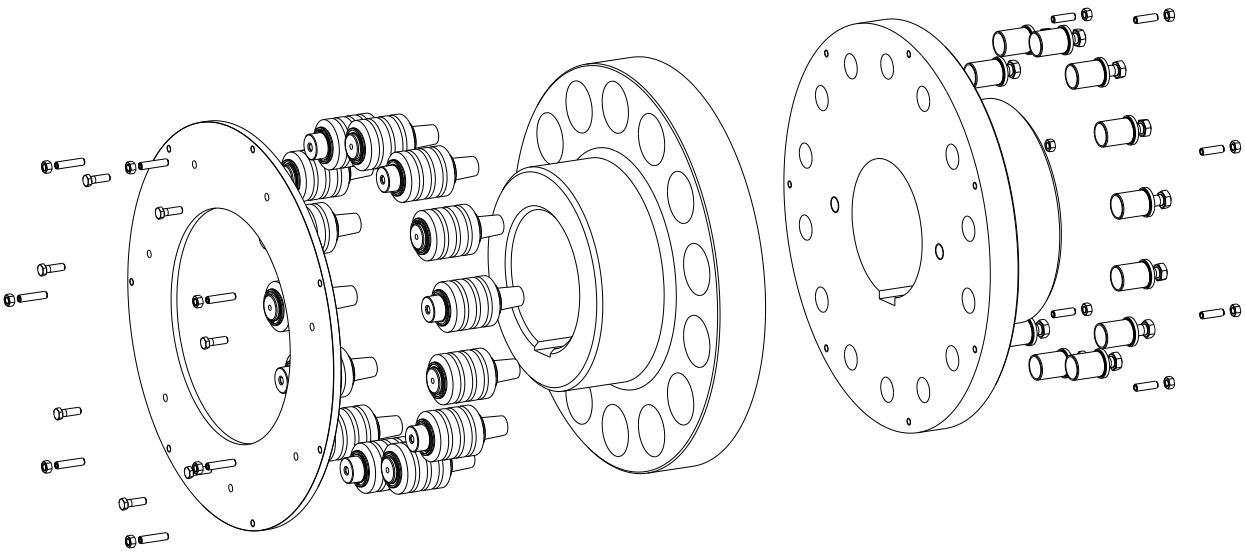

Type KX - AB
(taper pin design B)

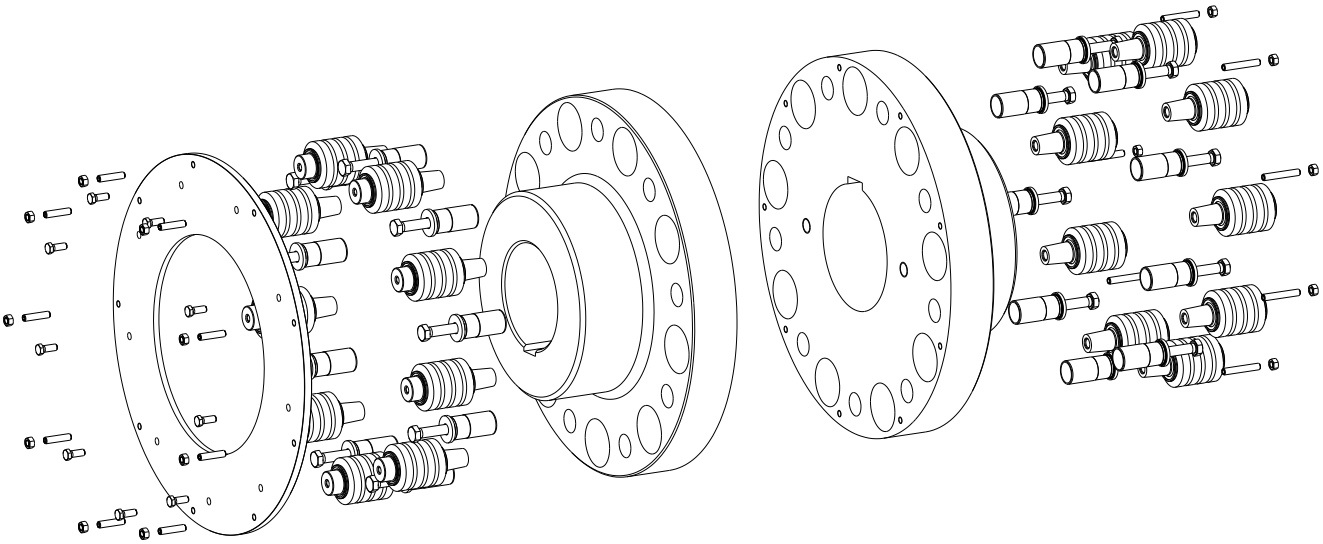

Type KX-D - AB
(taper pin design B)

REVOLEX® KX / KX-D is a torsionally flexible pin & bush coupling. It is able to compensate for shaft misalignment, for example caused by manufacturing inaccuracies, thermal expansion, etc.

Table of contents

1 Technical data

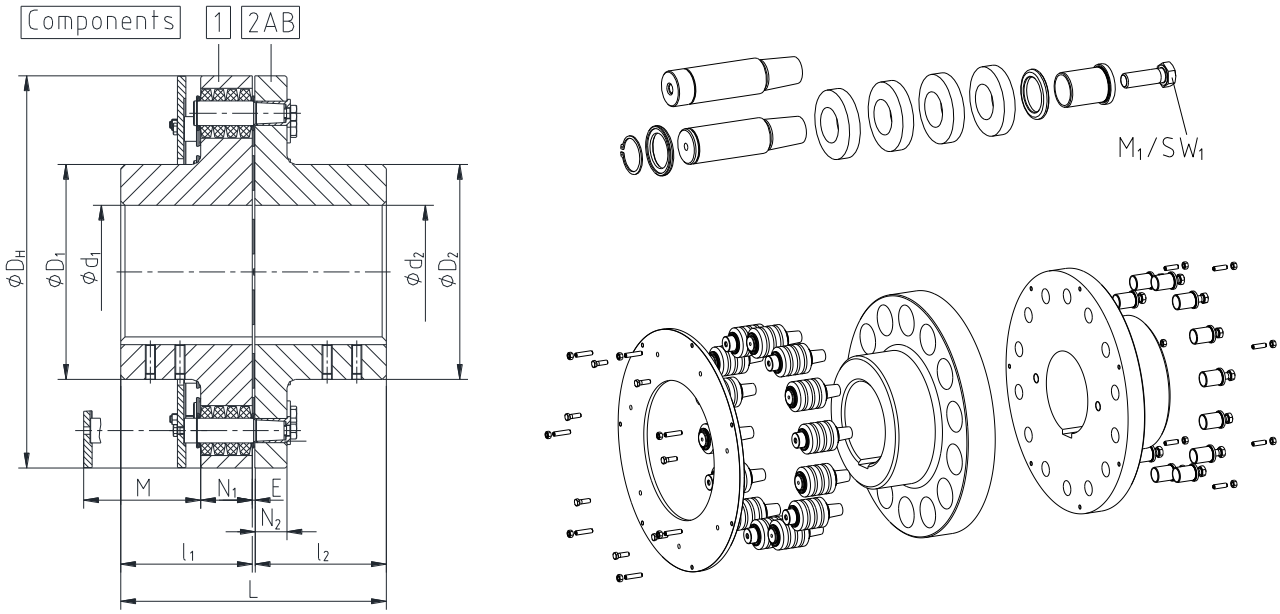

Illustration 1: REVOLEX® type KX - AB (taper pin design B)

Table 1: Torques and dimensions - type KX - AB (taper pin design B)

REVOLEX® KX - AB														
Size	Torque 1) [Nm]		Cast iron		Steel		Dimensions [mm]							
							General							
	T_{KN}	$T_{K\,max.}$	Max. speed 2) [rpm]	Finish bore max. 3) d_1, d_2	Max. speed 2) [rpm]	Finish bore max. 3) d_1, d_2	L	l_1, l_2	E	D_H	D_1, D_2	N_1	N_2	M*
KX 105	7050	14100	2000	110/125	3475	130	237	117	3	330	180	56	30	115
KX 120	10855	21710	1800	125/145	3100	150	270	132	6	370	206	76	46	140
KX 135	15000	30000	1600	140/150	2725	170	300	147	6	419	230	76	46	140
KX 150	19440	38880	1450	160	2500	185	336	165	6	457	256	76	46	140
KX 170	29285	58570	1250	180	2150	220	382	188	6	533	292	92	63	170
KX 190	40500	81000	1100	205	1900	245	428	211	6	597	330	92	63	170
KX 215	52500	105000	1000	230	1725	275	480	237	6	660	368	92	63	170
KX 240	70000	140000	900	250	1550	310	534	264	6	737	407	122	76	215
KX 265	100500	201000	800	285	1375	350	590	292	6	826	457	122	76	215

1) Standard material NBR (Perbunan) 80 ± 5 Shore A
2) Dynamic balancing required
3) Bores H7 with keyway according to DIN 6885 sheet 1 [JS9] and setscrew on the keyway (see table 7)

* Drop-out center dimension required

Table 2: Pin - type KX - AB (taper pin design B)

Size	KX 105	KX 120	KX 135	KX 150	KX 170	KX 190	KX 215	KX 240	KX 265
Pin size	3	4			5			6	
M_1 [mm]	M10	M12			M16			M24	
SW_1 [mm]	16	18			24			36	
Tightening torque T_A [Nm]	67	115			290			970	

1 Technical data

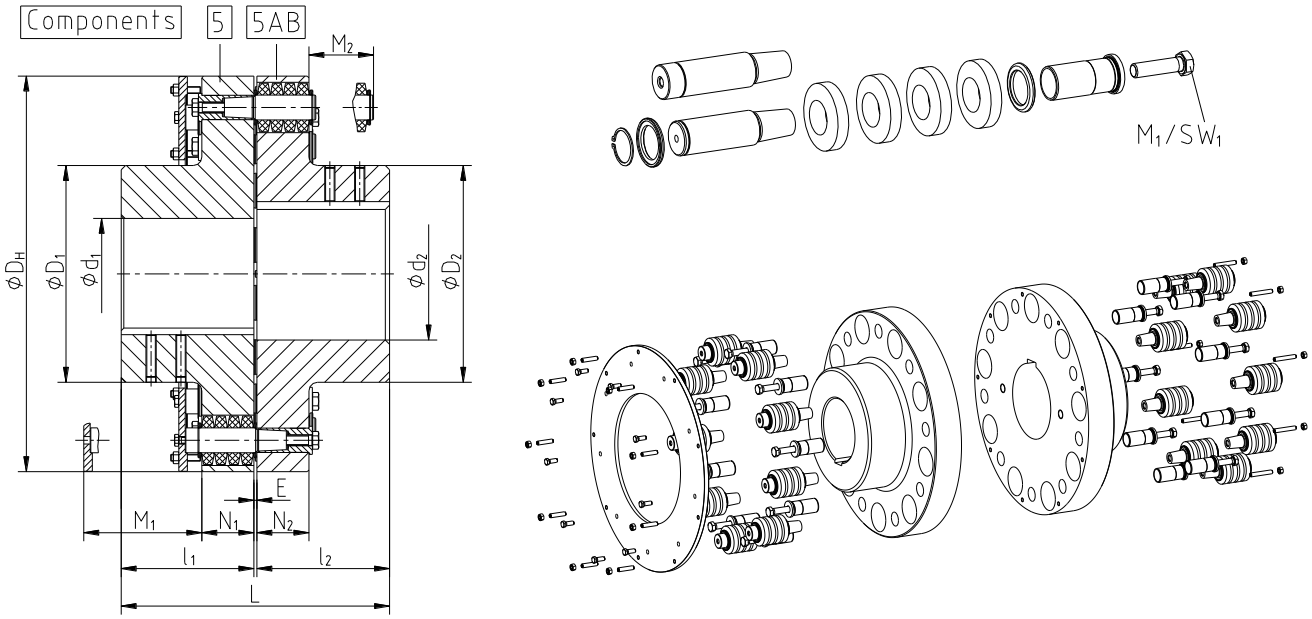

Illustration 2: REVOLEX® type KX-D - AB (taper pin design B)

Table 3: Torques and dimensions - type KX-D - AB (taper pin design B)

REVOLEX® KX-D - AB														
Size	Torque 1) [Nm]		Cast iron		Steel		Dimensions [mm]							
							General							
	T_{KN}	$T_{K\,max.}$	Max. speed 2) [rpm]	Finish bore max. 3) d_1, d_2	Max. speed 2) [rpm]	Finish bore max. 3) d_1, d_2	L	l_1, l_2	E	D_H	D_1, D_2	N_1, N_2	M_1*	M_2*
KX-D 75	4300	8600	-	-	4500	100	193	95	3	255	136	56	115	76
KX-D 85	5500	11000	-	-	4175	110	213	105	3	274	152	56	115	76
KX-D 95	7200	14400	-	-	3825	125	227	112	3	298	168	56	115	76
KX-D 105	9400	18800	2000	110	3475	130	237	117	3	330	180	56	115	76
KX-D 120	15200	30400	1800	125	3100	150	270	132	6	370	206	76	140	100
KX-D 135	20000	40000	1600	140	2725	170	300	147	6	419	230	76	140	100
KX-D 150	25000	50000	1450	160	2500	190	336	165	6	457	256	76	140	100
KX-D 170	41000	82000	1250	180	2150	220	382	188	6	533	292	92	170	130
KX-D 190	54000	108000	1100	205	1900	245	428	211	6	597	330	92	170	130
KX-D 215	67500	135000	1000	230	1725	275	480	237	6	660	368	92	170	130
KX-D 240	98000	196000	900	250	1550	310	534	264	6	737	407	122	215	170
KX-D 265	134000	268000	800	285	1375	350	590	292	6	826	457	122	215	170
KX-D 280	170000	340000	720	315	1225	385	628	311	6	927	508	122	215	170
KX-D 305	205000	410000	675	330	1150	405	654	324	6	991	533	122	215	170
KX-D 330	265000	530000	625	355	1075	435	666	330	6	1067	572	122	215	170
KX-D 355	350000	700000	575	380	975	450	721	356	9	1156	610	122	215	170
KX-D 370	430000	860000	535	450	900	530	773	382	9	1250	720	122	215	170

1) Standard material NBR (Perbunan) 80 ± 5 Shore A
2) Dynamic balancing required
3) Bores H7 with keyway according to DIN 6885 sheet 1 [JS9] and setscrew on the keyway (see table 7)

* Drop-out center dimension required

Table 4: Pin - type KX-D - AB (taper pin design B)

Size	75	85	95	105	120	135	150	170	190
Pin size	3				4			5	
M_1 [mm]	M10				M12			M16	
SW_1 [mm]	17				19			24	
Tightening torque T_A [Nm]	67				115			290	

Size	215	240	265	280	305	330	355	370
Pin size	5	6					7	
M_1 [mm]	M16	M24					M30	
SW_1 [mm]	24	36					46	
Tightening torque T_A [Nm]	290	970					1350	

2 Advice

2.1 General advice

Please read through these operating/assembly instructions carefully before you start up the coupling.
Please pay special attention to the safety instructions!
The operating/assembly instructions are part of your product. Please store them carefully and close to the coupling. The copyright for these operating/assembly instructions remains with KTR.

2.2 Safety and advice symbols

STOP	**Warning of personal injury**	This symbol indicates notes which may contribute to preventing bodily injuries or serious bodily injuries that may result in death.
!	**Warning of product damages**	This symbol indicates notes which may contribute to preventing material or machine damage.
☞	**General advice**	This symbol indicates notes which may contribute to preventing adverse results or conditions.
	Warning of hot surfaces	This symbol indicates notes which may contribute to preventing burns with hot surfaces resulting in light to serious bodily injuries.

2.3 General hazard warnings

STOP

With assembly, operation and maintenance of the coupling it has to be made sure that the entire drive train is secured against accidental switch-on. You may be seriously hurt by rotating parts. Please make absolutely sure to read through and observe the following safety indications.

- All operations on and with the coupling have to be performed taking into account "safety first".
- Make sure to switch off the power pack before you perform your work on the coupling.
- Secure the power pack against accidental switch-on, e. g. by providing warning signs at the place of switch-on or removing the fuse for current supply.
- Do not reach into the operating area of the coupling as long as it is in operation.
- Please secure the coupling against accidental contact. Please provide for the necessary protection devices and covers.

2 Advice

2.4 Intended use

You may only assemble, operate and maintain the coupling if you

- have carefully read through the operating/assembly instructions and understood them
- are technically qualified and specifically trained (e. g. safety, environment, logistics)
- are authorized by your company

The coupling may only be used in accordance with the technical data (see chapter 1). Unauthorized modifications on the coupling design are not admissible. We will not assume liability for any damage that may arise. In the interest of further development we reserve the right for technical modifications.
The **REVOLEX® KX / KX-D** described in here corresponds to the technical status at the time of printing of these operating/assembly instructions.

2.5 Coupling selection

For a permanent and failure-free operation of the coupling it must be selected according to the selection instructions (according to DIN 740 part 2) for the particular application (see catalogue drive technology "REVOLEX®").
We recommend balancing from a circumferential speed of 30 m/s.
If the operating conditions (performance, speed, modifications on engine and machine) change, the coupling selection must be reviewed.
Please make sure that the technical data regarding torque refer to the elastomers only. The transmittable torque of the shaft-hub-connection must be reviewed by the customer and is subject to his responsibility.

For drives subject to torsional vibrations (drives with cyclic stress due to torsional vibrations) it is necessary to perform a torsional vibration calculation to ensure a reliable selection. Typical drives subject to torsional vibrations are e. g. drives with diesel engines, piston pumps, piston compressors etc. If requested, KTR will perform the coupling selection and the torsional vibration calculation.

2.6 Reference to EC Machinery Directive 2006/42/EC

The couplings supplied by KTR should be considered as components, not machines or partly completed machines according to EC Machinery Directive 2006/42/EC. Consequently KTR does not have to issue a declaration of incorporation. For details about safe assembly, start-up and safe operation refer to the present operating/assembly instructions considering the warnings.

3 Storage, transport and packaging

3.1 Storage

The coupling hubs are supplied in preserved condition and can be stored at a dry and roofed place for 6 - 9 months.
The features of the elastomer rings remain unchanged for up to 5 years with favourable storage conditions.

The storage rooms must not include any ozone-generating devices like e. g. fluorescent light sources, mercury-vapour lamps or electrical high-voltage appliances.
Humid storage rooms are not suitable.
Please make sure that condensation is not generated. The best relative air humidity is less than 65 %.

3.2 Transport and packaging

In order to avoid any injuries and any kind of damage always make use of proper transport and lifting equipment.

The couplings are packed differently each depending on size, number and kind of transport. Unless otherwise contractually agreed, packaging will follow the in-house packaging specifications of KTR.

4 Assembly

The coupling is generally supplied in individual parts. Before assembly the coupling has to be inspected for completeness.

4.1 Components of the couplings

Components of REVOLEX®, type KX - AB (taper pin design B)

Component	Number	Description
1 [1)]	1	Hub part 1
2AB [1)]	1	Hub part 2AB
3a	see table 5	Pins KX complete (design B)
3e	see table 5	Pins KX AB complete (design B)
4	see table 5	KX bush
7a	1	AB disk KX
8	see table 5	Hexagon screw DIN EN ISO 4017
9	see table 5	Setscrew DIN EN ISO 4029
10	see table 5	Setscrew DIN EN ISO 4029
11	see table 5	Hexagon nut DIN EN ISO 4032
12 [2)]		Setscrew DIN EN ISO 4029

1) Material and balancing condition as specified by the customer
2) Axial fastening of the hub and tolerances of the shaft-hub-connections as specified by the customer

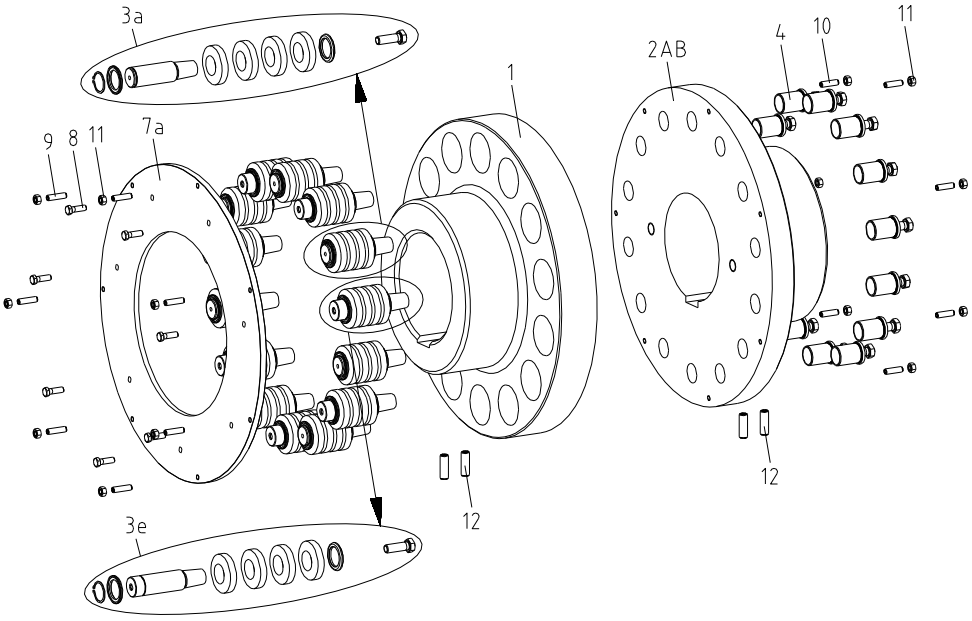

Illustration 3: REVOLEX® type KX - AB (taper pin design B)

Table 5:

Number z of components	Size								
	KX 105	KX 120	KX 135	KX 150	KX 170	KX 190	KX 215	KX 240	KX 265
3a, 3e, 8, 9, 10	6	5	6	7	5	6	7	5	6
4, 11	12	10	12	14	10	12	14	10	12

4 Assembly

4.1 Components of the couplings

Components of REVOLEX®, type KX-D - AB (taper pin design B)

Component	Number	Description
5 [1)]	1	Hub part 5
5AB [1)]	1	Hub part 5AB
3c	see table 6	Pin KX-D complete (design B)
3f	see table 6	Pins KX-D AB complete (design B)
6	see table 6	KX-D bush
7b	1	AB disk KX-D
8	see table 6	Hexagon screw DIN EN ISO 4017
9	see table 6	Setscrew DIN EN ISO 4029
10	see table 6	Setscrew DIN EN ISO 4029
11	see table 6	Hexagon nut DIN EN ISO 4032
12 [2)]		Setscrew DIN EN ISO 4029

1) Material and balancing condition as specified by the customer
2) Axial fastening of the hub and tolerances of the shaft-hub-connections as specified by the customer

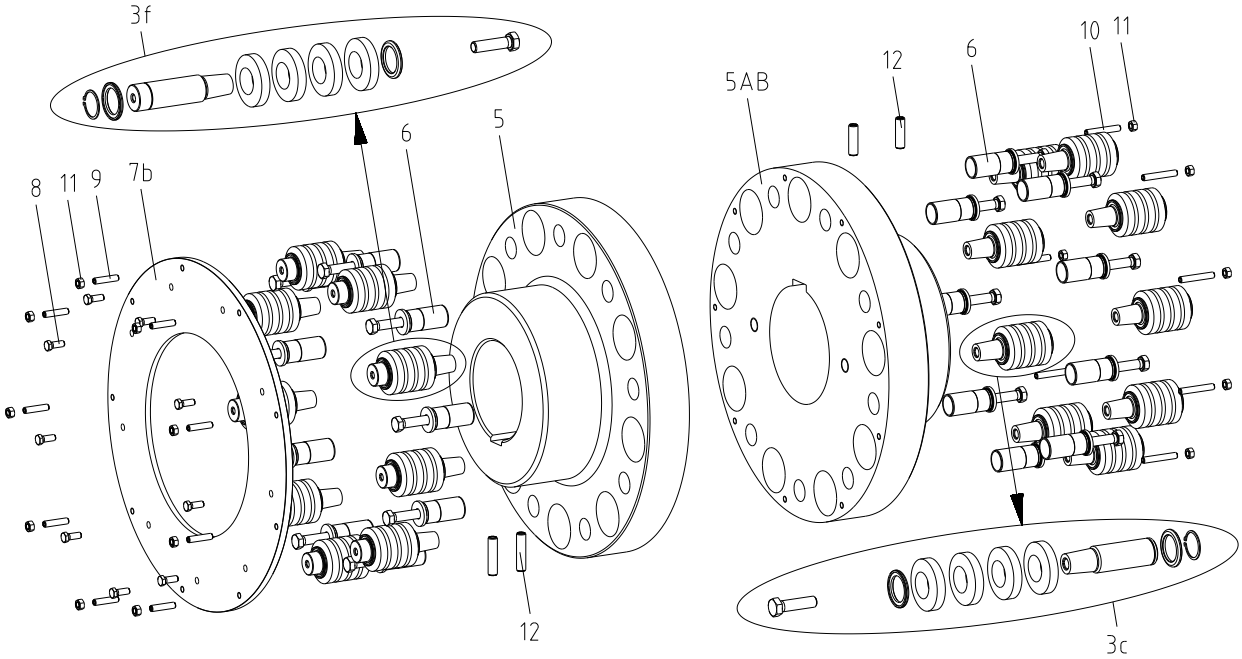

Illustration 4: REVOLEX® type KX-D - AB (taper pin design B)

Table 6:

Number z of components	Size								
	KX-D 75	KX-D 85	KX-D 95	KX-D 105	KX-D 120	KX-D 135	KX-D 150	KX-D 170	KX-D 190
3c, 3f, 8, 9, 10	5	6	7	8	7	8	9	7	8
6, 11	10	12	14	16	14	16	18	14	16

Number z of components	Size							
	KX-D 215	KX-D 240	KX-D 265	KX-D 280	KX-D 305	KX-D 330	KX-D 355	KX-D 370
3c, 3f, 8, 9, 10	9	7	8	9	10	12	13	15
6, 11	18	14	16	18	20	24	26	30

4 Assembly

4.2 Components of the pins

Components of complete pin KX (design B) - component 3a

Component	Number	Description
3.1b	1	Pin KX (design B)
3.2	4	Elastomer ring
3.3b	2	Disk
3.4a	1	Hexagon screw DIN EN ISO 4017
3.5	1	Circlip DIN 471

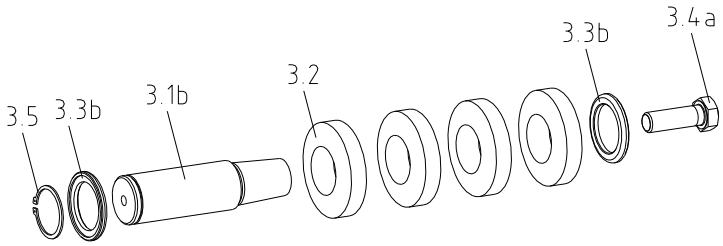

Illustration 5: Pin KX complete (design B)

Components of complete pin KX AB (design B) - component 3e

Component	Number	Description
3.1c	1	Pin KX AB (design B)
3.2	4	Elastomer ring
3.3b	2	Disk
3.4a	1	Hexagon screw DIN EN ISO 4017
3.5	1	Circlip DIN 471

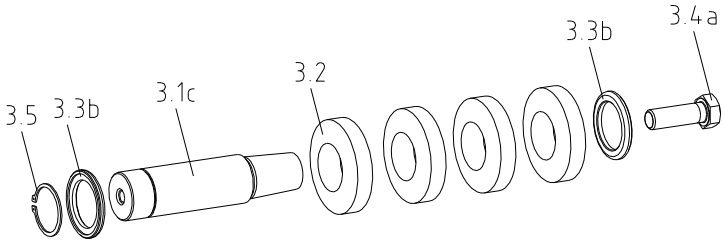

Illustration 6: Pin KX AB complete (design B)

4 Assembly

4.2 Components of the pins

Components of complete pin KX-D (design B) - component 3c

Component	Number	Description
3.1b	1	Pin KX (design B)
3.2	4	Elastomer ring
3.3b	2	Disk
3.4c	1	Hexagon screw DIN EN ISO 4017
3.5	1	Circlip DIN 471

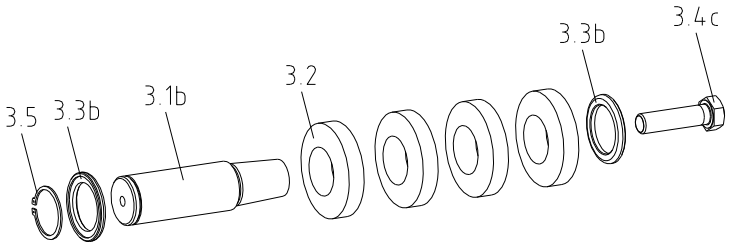

Illustration 7: Pin KX-D complete (design B)

Components of complete pin KX-D AB (design B) - component 3f

Component	Number	Description
3.1c	1	Pin KX AB (design B)
3.2	4	Elastomer ring
3.3b	2	Disk
3.4c	1	Hexagon screw DIN EN ISO 4017
3.5	1	Circlip DIN 471

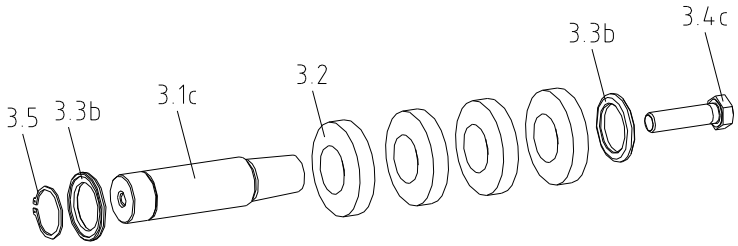

Illustration 8: Pin KX-D complete (design B)

4 Assembly

4.3 Advice for finish bore

STOP

The maximum permissible bore diameters d (see chapter 1 - technical data) must not be exceeded. If these figures are disregarded, the coupling may tear. Rotating particles may cause danger to life.

- Hub bores machined by the customer have to observe concentricity or axial runout, respectively (see illustration 9).
- Please make absolutely sure to observe the figures for Ø d_{max}.
- Carefully align the hubs when the finish bore is drilled.
- The bore tolerance should preferably be selected as per table 8.
- Please provide for a setscrew according to DIN EN ISO 4029 with a cup point or an end plate to fasten the hubs axially.

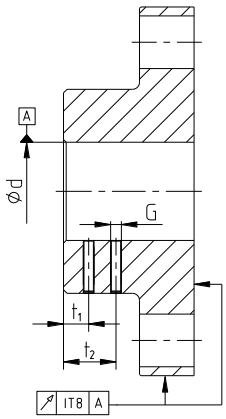

Illustration 9: Concentricity and axial run-out

The customer bears the sole responsibility for all machining processes performed subsequently on unbored or pilot bored as well as finish machined coupling components and spare parts. KTR does not assume any warranty claims resulting from insufficient remachining.

Table 7: Setscrew DIN EN ISO 4029

Size	75	85	95	105	120	135	150	170	190
Dimension G [mm]	M16	M16	M20	M20	M24	M24	M24	M24	M24
Dimension t_1 [mm]	25	25	30	40	30	45	45	50	50
Dimension t_2 [mm]	-	-	-	-	-	-	-	-	-
Tightening torque T_A [Nm]	80	80	140	140	220	220	220	220	220

Size	215	240	265	280	305	330	355	370
Dimension G [mm]	M24	M24	M24	M24	M24	M24	M24	M24
Dimension t_1 [mm]	50	50	60	70	70	70	80	80
Dimension t_2 [mm]	110	110	120	140	150	150	160	160
Tightening torque T_A [Nm]	220	220	220	220	220	220	220	220

Table 8: Recommended fit pairs acc. to DIN 748-1

Bore [mm]		Shaft tolerance	Bore tolerance
above	up to		
	50	k6	H7 (KTR standard)
50		m6	

If a feather keyway is intended to be used in the hub, it should correspond to the tolerance ISO JS9 (KTR standard) with standard operating conditions or ISO P9 with complicated operating conditions (frequently alternating torsional direction, shock loads, etc.). In this case the keyway should be flush with one of the locating bores for the pins. With axial fastening by the setscrew the tapped hole should be located on the keyway.

The transmittable torque of the shaft-hub-connection must be reviewed by the customer and is subject to his responsibility.

4 Assembly

4.3 Advice for finish bore

Unbored/pilot bored hubs are supplied without balancing. If balancing is necessary subject to the application, it should be made on completion of the finish bore. The balancing bores have to be made in the positions marked in illustration 10.

The balancing bores have to be made between the pin bores in every case.

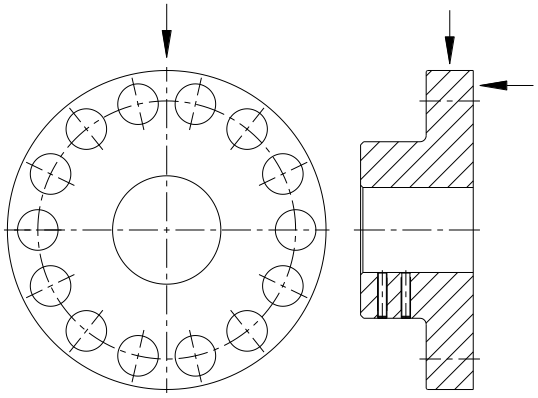

Illustration 10

4.4 Assembly of the coupling (general)

We recommend to inspect bores, shaft, keyway and feather key for dimensional accuracy before assembly.

Heating the hubs lightly (approx. 80 °C) allows for an easier mounting on the shaft.

Touching the heated hubs causes burns.
Please wear safety gloves.

With the assembly please make sure that the distance dimension E (see table 1 and 4) is observed so that the hubs are not in contact with each other during the operation. The motor shaft has to be located in the magnetic center. Disregarding this advice may cause damage to the coupling.

With the assembly of screw connections only those screws specified by the manufacturer have to be used. When tightening the screws the torque specified by the manufacturer has to be observed. The screws have to be secured against working loose, e. g. by conglutinating with Loctite (average strength).

In order to avoid any injuries please always make use of proper lifting equipment.

There are tapped holes on the face and outside diameter of the coupling serving for using proper sling gears or lifting equipment, respectively. If proper sling gears are used they should be dismounted after assembly of the coupling.

4 Assembly

4.5 Assembly of type KX

- Before assembly make sure that the motor shaft is located in the magnetic center.

- Drive the sleeves (component 4) into the bores of the hub part 2AB (component 2AB) by light blows (see illustration 11).

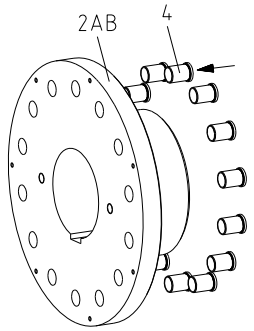

Illustration 11

- Suspend the disk (component 7a) on the shaft for the hub part 1 (component 1) (see illustration 12).
- Please assemble the hubs onto the shafts of the driving and driven side in a way that the flat faces of the coupling hubs are flush with the faces of the shafts (see illustration 12).

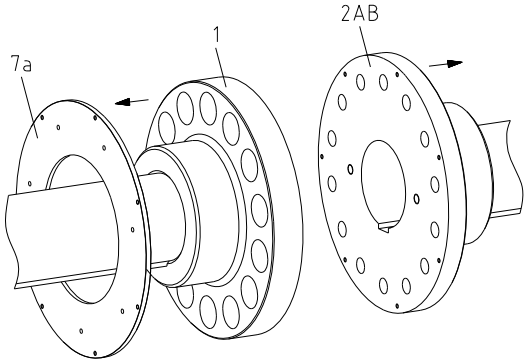

Illustration 12

- Shift the power packs in axial direction until the distance dimension E has been achieved (see illustration 13). Please make sure that the motor shaft is located in the magnetic center.
- If the power packs are already firmly assembled, shifting the hubs axially on the shafts allows for setting the distance dimension E.
- Fasten the hubs by tightening the setscrews DIN EN ISO 4029 at the tightening torque acc. to table 7.
- Align the coupling hubs in a way that the bores for the pins are flush.

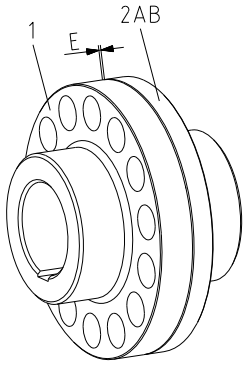

Illustration 13

Please consider permissible shaft displacements of chapter 4.8!

- Insert the pins (component 3a and 3e) into the hub part 1 (see illustration 14).
- Screw up the pins to the hexagon screws (component 3.4a) and tighten them evenly to the tightening torques specified in table 2 by means of a torque key (see illustration 14).

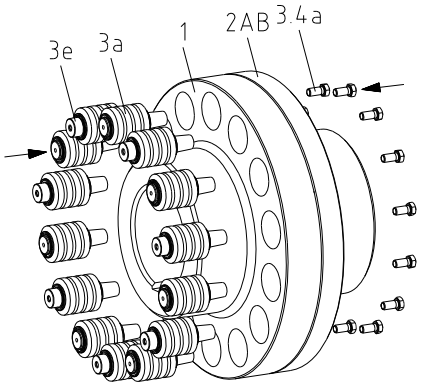

Illustration 14

The screws have to be secured against working loose, e. g. by conglutinating with Loctite (average strength).

Having started up the coupling the tightening torques of the screws have to be inspected during usual inspection intervals.

4 Assembly

4.6 Assembly of type KX-D

- Before assembly make sure that the motor shaft is located in the magnetic center.

- Drive the sleeves (component 6) into the smaller bores of the hubs part 5 (component 5) or part 5AB (component 5AB) by light blows (see illustration 15).

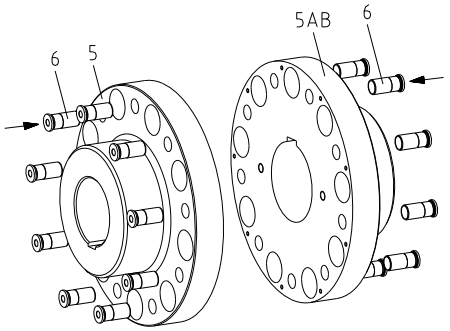

Illustration 15

- Suspend the disk (component 7b) on the shaft for the hub part 5 (see illustration 16).
- Please assemble the hubs onto the shafts of the driving and driven side in a way that the flat faces of the coupling hubs are flush with the faces of the shafts (see illustration 16).

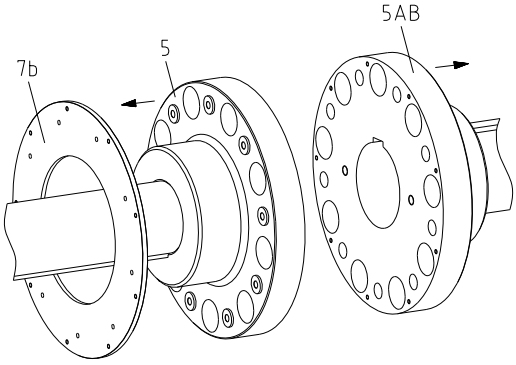

Illustration 16

- Shift the power packs in axial direction until the distance dimension E has been achieved (see illustration 17). Please make sure that the motor shaft is located in the magnetic center.
- If the power packs are already firmly assembled, shifting the hubs axially on the shafts allows for setting the distance dimension E.
- Fasten the hubs by tightening the setscrews DIN EN ISO 4029 at the tightening torque acc. to table 7.
- Align the coupling hubs in a way that the bores for the pins are flush.

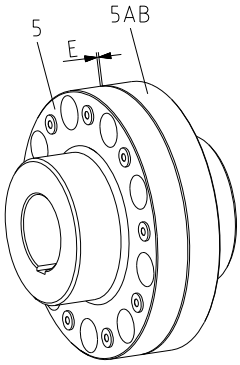

Illustration 17

Please consider permissible shaft displacements of chapter 4.8!

- Insert the pins (components 3c and 3f) in the larger holes of the hub part 5 or part 5AB (see illustration 18).
- Screw up the pins with the hexagon screws (component 3.4c) and tighten them evenly to the tightening torques specified in table 4 by means of a torque key (see illustration 18).

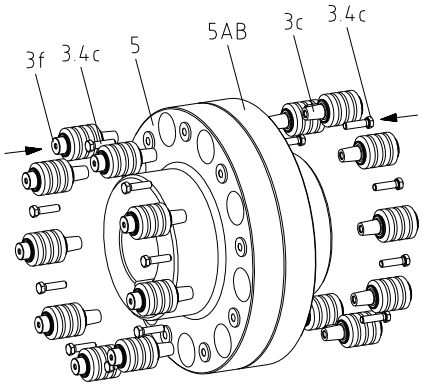

Illustration 18

The screws have to be secured against working loose, e. g. by conglutinating with Loctite (average strength).

Having started up the coupling the tightening torques of the screws have to be inspected during usual inspection intervals.

4 Assembly

4.7 Setting of limitation of axial backlash

- Mount the disk (component 7a or 7b) to the hexagon screws (component 8) of the coupling (see illustration 19) and tighten it evenly to the tightening torques specified in table 9.
- Screw the hexagon nuts (component 11) onto the setscrews (component 9 or 10).
- Screw the setscrews (component 9 or 10) into the disk (component 7) or hub part 5AB.
- Identify the axial backlash of the entire coupling. It should be half as big as the axial backlash of the motor. Please make sure that the permissible axial displacement of the coupling is not exceeded (see table 11).

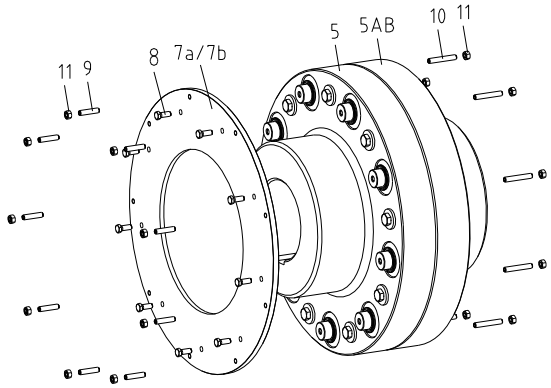

Illustration 19

The axial limitation of the coupling must in every case be smaller than the axial backlash of the motor and big enough to make sure that the coupling is able to compensate for angular displacements.

- Set the axial backlash of the coupling (see illustration 20). Dimension x is each half of the axial backlash identified of the entire coupling. Please make sure that the motor shaft is located in the magnetic center.

  Example:

  Axial backlash of the motor = 4 mm

  Axial backlash of the entire coupling = 2 mm

  Dimension x (axial backlash per coupling hub) = 1 mm

- Fix the position of setscrews (component 9 or 10) by countering with hexagon nuts (component 11). Tighten them evenly to the torques specified in table 10. Protect the setscrew from turning.

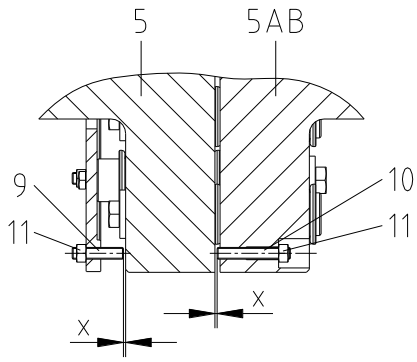

Illustration 20

Table 9: Tightening torques - hexagon screws (component 8)

Size	75	85	95	105	120	135	150	170	190	215	240	265	280	305	330	355	370
Screw size	M10				M12			M16									
Tightening torque T_A [Nm]	69				120			295									

Table 10: Tightening torques - hexagon nuts (component 11)

Size	75	85	95	105	120	135	150	170	190	215	240	265	280	305	330	355	370
Screw size	M10				M12			M16								M24	
Tightening torque T_A [Nm]	17				40			80								240	

4 Assembly

4.8 Replacement of elastomer rings

Option 1: Replacement of elastomer rings without dismounting the pins:

- Disassemble the disk (component 7a or 7b) and carefully suspend it on the shaft.
- Pull the driving and driven side far apart so that the coupling is separated or shift the coupling free from load.
- Remove the circlip (component 3.5) and the disk (component 3.3b).
- Disassemble the elastomers (component 3.2).
- Replace the elastomer rings in sets only.

☞ **Elastomer rings of the same size only may be used.**

- The new elastomer rings are mounted in reverse order. Afterwards set the axial backlash limitation as per chapter 4.7.

Option 2: Replacement of pins or elastomer rings by dismounting the pins:

- Disassemble the disk (component 7a or 7b) and carefully suspend it on the shaft.
- Pull the driving and driven side far apart so that the coupling is separated or shift the coupling free from load.
- Disassemble the screw (illustration 21; component 3.4a or 3.4c). Afterwards clean the tapping and the thread of the screw.

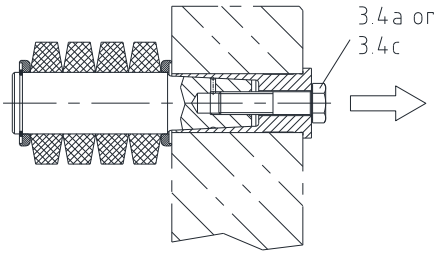

Illustration 21: Disassembly of hexagon screw

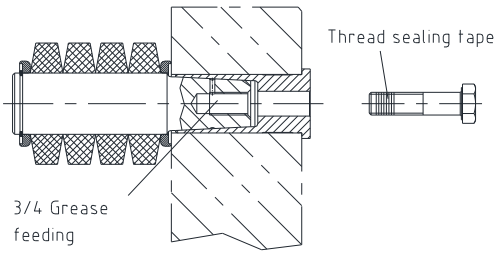

Illustration 22: Cleaning the tapping

STOP **Wear safety glasses.**

- Fill the tapped holes of the pin (component 3.1b) with standard grease by three quarters.
- Wrap a thread sealing tape Loctite 55 around the screw. Leave out the first 2 to 3 threads to make sure that the screw can be screwed in properly (see illustration 22).
- Screw the screw manually into the pin by 2 to 3 threads.

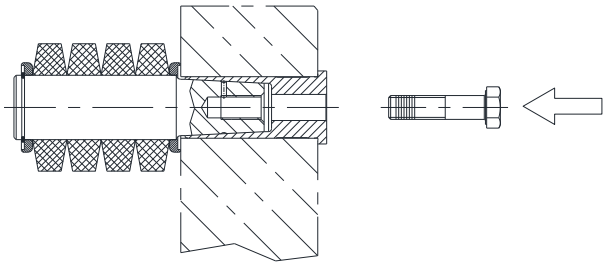

Illustration 23: Assembly of hexagon screw

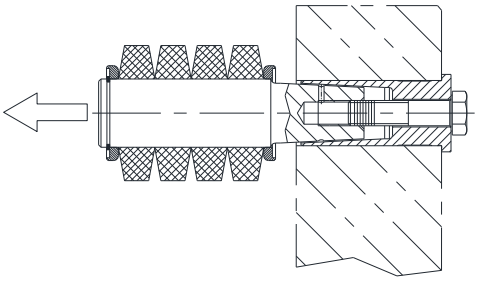

Illustration 24: Unscrewing the pin

4 Assembly

4.8 Replacement of elastomer rings

STOP

Abrupt movement of the screw (component 3.4a or 3.4c) or sudden unscrewing of the pin (component 3.1b) results in the risk of getting jammed.
Sudden movement of the pin can be realized by loud noise.

- Screw the screw slowly deeper into the pin via a spanner. The grease flows through the cross hole of the pin pressing between pin and bush (illustration 24; component 4 or 6).
- If feasible resistance is not generated, it may be necessary to refill the grease or vent the system.

☞ **If grease escapes from the tapped hole, the screw needs to be re-sealed with thread sealing tape Loctite 55.**

- As soon as the pin has come off the taper seat of the bush, the extraction process is completed.
- Press all pins out of their seats one after another following the process described above.
- Replace the elastomer rings on the pins as per chapter 4.7 of option 1 described.

☞ **If the pins are re-used they have to be cleaned from grease free from any residues.**

- The pins are mounted as per chapter 4.5 or 4.6. Afterwards set the axial backlash limitation as per chapter 4.7.

4.9 Displacements - alignment of the couplings

The **REVOLEX® KX / KX-D** compensates for displacements generated by the shafts to be combined as specified in table 11. Excessive misalignment may be generated by inaccurate alignment, production tolerances, thermal expansion, shaft deflection, twisting of machine frames, etc.

⚠ **In order to ensure a long service life of the coupling, the shaft ends have to be accurately aligned. Please absolutely observe the displacement figures specified (see table 11). If the figures are exceeded, the coupling will be damaged.**
The more accurate the alignment of the coupling, the longer is its service life.

Please note:

- The displacement figures specified in table 11 are maximum figures which must not arise in parallel. If radial and angular displacement occur at the same time, the sum of the displacement figures must not exceed ΔK_r or ΔK_w (see illustration 26).
- Please check with a dial gauge, ruler, feeler or laser measuring device whether the permissible displacement figures of table 11 can be observed.

4 Assembly

4.9 Displacements - alignment of the couplings

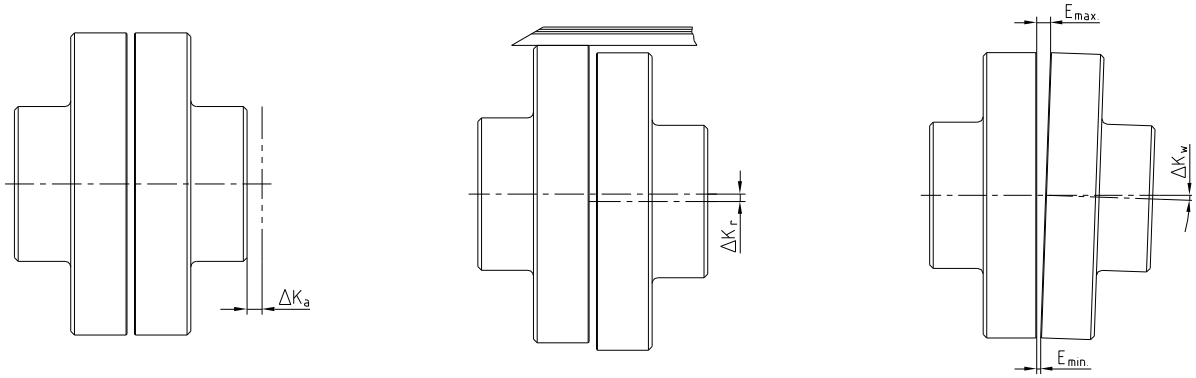

Axial displacements | Radial displacements | Angular displacements

$L_{adm.} = L + \Delta K_a$ [mm]

$\Delta K_w = E_{max.} - E_{min.}$ [mm]

Illustration 25: Displacements

Examples of the displacement combinations specified in illustration 26:

Example 1:
$\Delta K_r = 30$ %
$\Delta K_w = 70$ %

Example 2:
$\Delta K_r = 60$ %
$\Delta K_w = 40$ %

$\Delta K_{total} = \Delta K_r + \Delta K_w \leq 100$ %

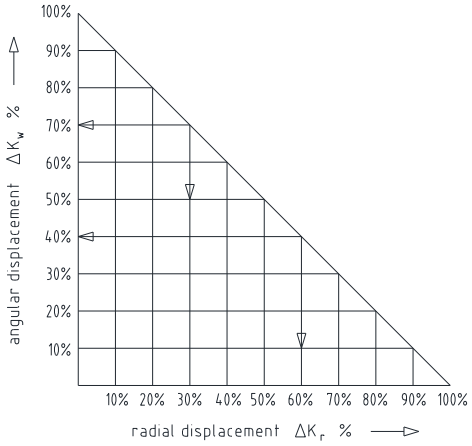

Illustration 26: Combinations of displacement

Table 11: Displacement figures

Size		75	85	95	105	120	135	150	170	190
Max. axial displacement ΔK_a [mm]		±1.5	±1.5	±1.5	±2	±2	±2	±2	±2.5	±2.5
Max. radial displacement ΔK_r [mm] or max. angular displacement ΔK_w [mm] with speed n [rpm]	250	0.95	1.10	1.10	1.2	1.3	1.4	1.5	1.7	1.9
	500	0.70	0.80	0.80	0.9	0.9	1.0	1.1	1.2	1.3
	750	0.60	0.65	0.65	0.7	0.8	0.8	0.9	1.0	1.1
	1000	0.50	0.55	0.55	0.6	0.7	0.7	0.8	0.9	0.9
	1500	0.40	0.45	0.45	0.5	0.5	0.6	0.6	0.7	0.8
	2000	0.35	0.40	0.40	0.4	0.5	0.5	0.5	0.6	0.7
	3000	0.30	0.35	0.35	0.4	0.4	-	-	-	-

Size		215	240	265	280	305	330	355	370
Max. axial displacement ΔK_a [mm]		±2.5	±2.5	±2.5	±2.5	±2.5	±4	±4	±4
Max. radial displacement ΔK_r [mm] or max. angular displacement ΔK_w [mm] with speed n [rpm]	250	2.0	2.5	2.7	2.9	3.1	3.3	3.5	3.8
	500	1.4	1.7	1.9	2.0	2.2	2.3	2.5	2.8
	750	1.2	1.4	1.6	1.7	1.8	1.9	2.0	2.2
	1000	1.0	1.2	1.4	1.4	1.5	1.7	1.8	-
	1500	0.8	1.0	-	-	-	-	-	-
	2000	-	-	-	-	-	-	-	-
	3000	-	-	-	-	-	-	-	-

5 Start-up

Before start-up of the coupling, please inspect the tightening of the setscrews in the hubs, the alignment and the distance dimension E and adjust, if necessary, and also inspect all screw connections for the tightening torques specified.

Finally the coupling protection against accidental contact must be fitted. It is required in accordance with DIN EN ISO 12100 (Safety of Machinery) and must protect against

- access with the little finger
- falling down of solid foreign objects.

The cover may provide for openings intended for necessary heat dissipation. These openings have to comply with DIN EN ISO 13857.
The cover must be electrically conductive and included in the equipotential bonding. Bellhousings (magnesium share below 7.5 %) made of aluminium and damping rings (NBR) can be used as connecting element between pump and electric motor. The cover may only be taken off with standstill of the unit.

During operation of the coupling, please pay attention to

- different operating noise
- vibrations occurring.

If you note any irregularities with the coupling during operation, the drive unit must be switched off immediately. The cause of the breakdown must be specified by means of the table „Breakdowns“ and, if possible, be eliminated according to the proposals. The potential breakdowns specified can be hints only. To find out the cause all operating factors and machine components must be considered.

6 Breakdowns, causes and elimination

The below-mentioned failures may result in a use of the **REVOLEX® KX / KX-D** coupling other than intended. In addition to the specifications given in these operating/assembly instructions make sure to avoid such failures. The errors listed can only be clues to search for the failures. When searching for the failure the adjacent components must generally be considered.

General failures with use other than intended:

- Important data for the coupling selection were not forwarded.
- The calculation of the shaft-hub-connection was not considered.
- Coupling components with damage occurred during transport are assembled.
- If the heated hubs are assembled, the permissible temperature is exceeded.
- The clearance of the components to be assembled is not coordinated with one another.
- Tightening torques have been fallen below/exceeded.
- Components are mixed up by mistake/assembled incorrectly.
- A wrong or no pin/elastomer ring is inserted in the coupling.
- No original **KTR** components (purchased parts) are used.
- Old/already worn out elastomer rings or elastomer rings stored for too long are used.
- Maintenance intervals are not observed.

6 Breakdowns, causes and elimination

Breakdowns	Causes	Elimination
Different operating noise and/or vibrations occuring	Misalignment	1) Set the unit out of operation 2) Eliminate the reason for the misalignment (e. g. loose foundation bolts, breaking of the engine mount, heat expansion of unit components, modification of the installation dimension E of the coupling) 3) Inspection of wear
	Wear of elastomers	1) Set the unit out of operation 2) Disassemble the coupling and remove remainders of the elastomer rings/pins 3) Inspect coupling components and replace coupling hubs that are damaged 4) Generally assemble new elastomer rings with new pins 5) Assemble coupling components 6) Inspect alignment, adjust if necessary
	Screws for axial fastening of hubs working loose	1) Set the unit out of operation 2) Inspect alignment of coupling 3) Tighten the screws to fasten the hubs and secure against working loose 4) Inspection of wear
Fracture of hub	Fracture of hub due to high impact energy/overload	1) Set the unit out of operation 2) Replace complete coupling 3) Find out the reason for overload 4) Inspect alignment
	Operating error of the unit	1) Set the unit out of operation 2) Replace complete coupling 3) Inspect alignment 4) Instruct and train the service staff
Early wear of elastomers	e. g. contact with aggressive liquids/oils, ozone influence, too high/low ambient temperatures etc. causing a physical modification of the elastomer rings	1) Set the unit out of operation 2) Disassemble the coupling and remove remainders of the elastomer rings/pins 3) Inspect coupling components and replace coupling hubs that are damaged 4) Generally assemble new elastomer rings with new pins 5) Assemble coupling components 6) Inspect alignment, adjust if necessary 7) Make sure that further physical modifications of the pins are excluded
	ambient/contact temperatures which are too high for the elastomer ring, max. permissible - 30 °C/+80 °C	1) Set the unit out of operation 2) Disassemble the coupling and remove remainders of the elastomer rings/pins 3) Inspect coupling components and replace coupling hubs that are damaged 4) Generally assemble new elastomer rings with new pins 5) Assemble coupling components 6) Inspect alignment, adjust if necessary 7) Inspect and adjust ambient/contact temperature
Early wear of pins (hardening/embrittlement of the pin elastomer)	Vibrations of drive	1) Set the unit out of operation 2) Disassemble the coupling and remove remainders of the elastomer rings/pins 3) Find out the reason for vibrations 4) Inspect coupling components and replace coupling hubs that are damaged 5) Generally assemble new elastomer rings with new pins 6) Assemble coupling components 7) Inspect alignment, adjust if necessary

If you operate with worn elastomer rings proper operation is not ensured.

7 Disposal

In respect of environmental protection we would ask you to dispose of the packaging or products on termination of their service life in accordance with the legal regulations and standards that apply, respectively.

- **Metal**
  Any metal components have to be cleaned and disposed of by scrap metal.
- **Nylon materials**
  Nylon materials have to be collected and disposed of by a waste disposal company.

8 Maintenance and service

REVOLEX® KX / KX-D is a low-maintenance coupling. We recommend to perform a visual inspection on the coupling **at least once a year**. Please pay special attention to the condition of the pins of the coupling.

- Since the flexible machine bearings of the driving and driven side settle during the course of load, inspect the alignment of the coupling and re-align the coupling, if necessary.
- The coupling parts have to be inspected for damages.
- The screw connections have to be inspected visually.

⚠ **Having started up the coupling the tightening torques of the screws have to be inspected during usual inspection intervals.**

9 Spares inventory, customer service addresses

We recommend to store major spare parts on site to ensure the readiness for use of the machine in case if a coupling fails.

Contact addresses of the KTR partners for spare parts and orders can be obtained from the KTR homepage at www.ktr.com.

☞ **KTR does not assume any liability or warranty for the use of spare parts and accessories which are not provided by KTR and for the damages which may incur as a result.**