DATAFLEX®

Torque measuring shaft type 110/…

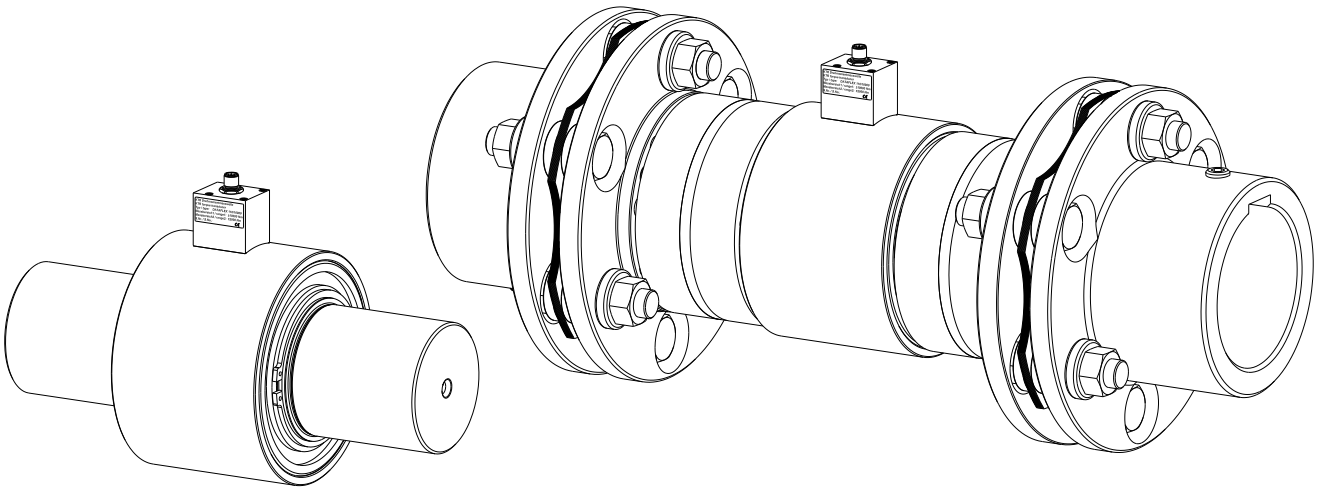

DATAFLEX® is a maintenance-free torque measuring shaft with two measuring ranges and integrated speed measurement. Combined with the steel laminae coupling **RADEX®-N** the complete system forms a torsionally stiff, double-cardanic coupling with integrated measuring shaft.

Table of contents

1 Technical data

DATAFLEX® torque measuring shaft

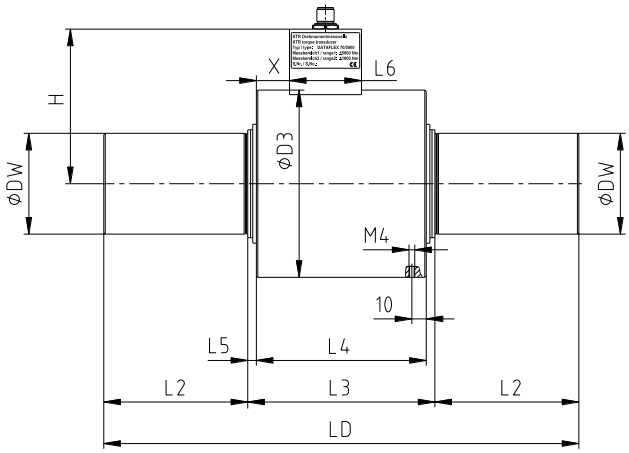

Illustration 1: DATAFLEX® torque measuring shaft

Table 1: Dimensions

DATAFLEX® type	Dimensions [mm]									
	DW	D3	LD	L2	L3	L4	L5	L6	H	X
110/10000 110/20000	110	196	393	120	153	138	7.5	50	141.4	34

Table 2: Technical data

Coupling size of DATAFLEX®	110/10000	110/20000
Electrical data		
Measuring range 1 - rated torque T_{KN} [Nm]	-10000 ... +10000 Nm	-20000 ... +20000 Nm
Measuring range 2 - rated torque T_{KN2} [Nm]	-2000 ... +2000 Nm	-10000 ... +10000 Nm
Band width of torque signal [kHz] (-3dB)	2	
Error in linearity incl. hysteresis [%] 1)	< 0.1 (< 0.2 2))	
Influence of temperature [%/10K]	0.05	
Nominal temperature range [°C]	0 - 55	
Supply voltage [V] DC	24 ± 4	
Max. current consumption [mA]	100	
Torque output		
Voltage output torque [V]	-10 ... +10	
Speed output 3)		
Number of pulses / revolution	2x 720	
Amplitude [V]	24/5V	
DC voltage output [V]	0 - 10	
Scale of DC voltage output	16fold via micro switch	
Inaccuracy of DC voltage output [%] 4)	± 0.2	
Direction signal [V]	24/5V	
Mechanical data		
Static load limit $T_{Kmax.}$ 1) [%]	150	
Breaking load $T_{K\,break}$ 1) [%]	300	
Max. bending torque [Nm]	320	520
Max. radial force [N]	1700	2800
Max. axial force [kN]	48	66
Weight [kg]	12.30	12.45
Torsion spring stiffness C_T [Nm/rad]	395000	500000
Torsion angle with T_{KN} [degrees]	0.44	0.57
Mass moment of inertia [kgmm²]	7200	7300
Max. speed [rpm]	4000	

1) Referring to rated torque T_{KN}
2) Referring to rated torque T_{KN2}
3) With connection housing DF2
4) Referring to upper range value

1 Technical data

DATAFLEX® torque measuring shaft in combination with RADEX®-N

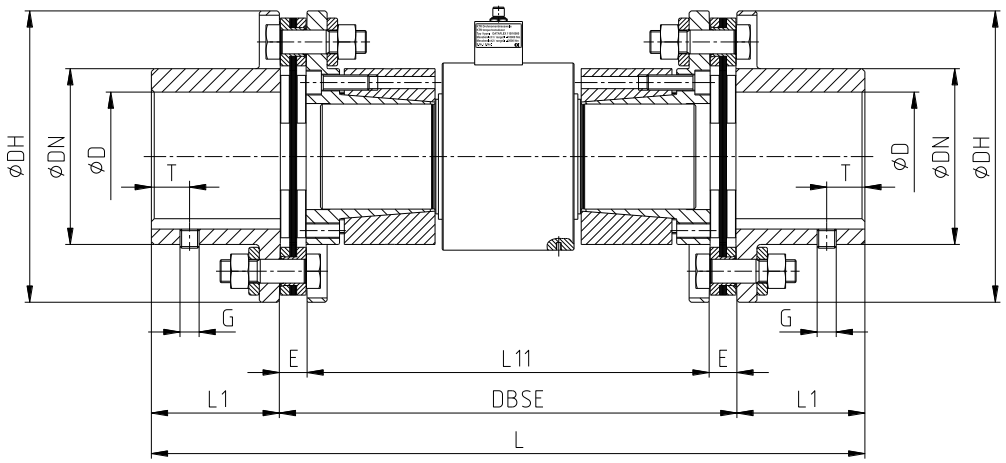

Illustration 2: DATAFLEX® 110/10000 with RADEX®-N 135

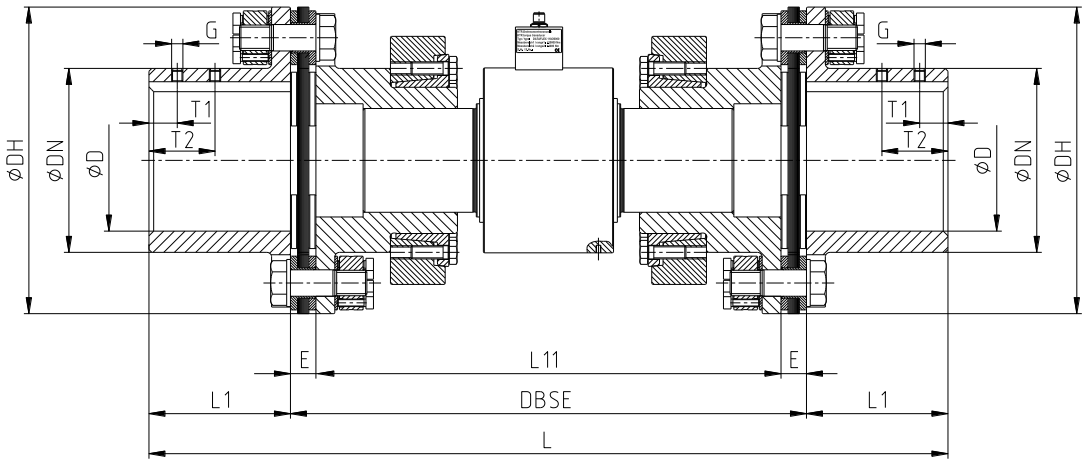

Illustration 3: DATAFLEX® 110/20000 with RADEX®-N 156

Table 3: Dimensions and technical data

Coupling size of DATAFLEX®	110/10000	110/20000
Coupling size of RADEX®-N	**135**	**156**
Dimensions [mm]		
Dimension DH	305	325
Dimension DN	184	195
Dimension $D_{max.}$	135	150
Dimension DBSE	477	547
Dimension L	747	847
Dimension L1	135	150
Dimension L11	423	493
Dimension E	27	27
Setscrew [mm]		
Dimension G	M20	M12
Dimension T	40	-
Dimension T1	-	30
Dimension T2	-	70
Tightening torque T_A [Nm]	140	40
Mechanical data of combination (DATAFLEX® with RADEX®-N)		
Mass moment of inertia [kgm^2]	1.026	1.701
Torsion spring stiffness [Nm/rad]	1.32×10^6	2.36×10^6
Weight [kg]	134.2	179.7
Max. speed [rpm] 1)	3000	3000

1) Higher speeds on request.

2 Advice

2.1 General advice

Read through these operating/assembly instructions carefully before you start up the measuring shaft.
Pay special attention to the safety instructions!
The operating/assembly instructions are part of your product. Please store them carefully and close to the measuring shaft. The copyright for these operating/assembly instructions remains with KTR.

2.2 Safety and advice symbols

Ex	**Warning of potentially explosive atmospheres**	This symbol indicates notes which may contribute to preventing bodily injuries or serious bodily injuries that may result in death caused by explosion.
STOP	**Warning of personal injury**	This symbol indicates notes which may contribute to preventing bodily injuries or serious bodily injuries that may result in death.
!	**Warning of product damages**	This symbol indicates notes which may contribute to preventing material or machine damage.
☞	**General advice**	This symbol indicates notes which may contribute to preventing adverse results or conditions.

2.3 General hazard warnings

STOP

With assembly, operation and maintenance of the measuring shaft it has to be made sure that the entire drive train is secured against accidental switch-on. You may be seriously hurt by rotating parts. Make absolutely sure to read through and observe the following safety indications.

- All operations on and with the measuring shaft have to be performed taking into account "safety first".
- Make sure to switch off the power pack before you perform your work on the measuring shaft.
- Secure the power pack against accidental switch-on, e. g. by providing warning signs at the place of switch-on or removing the fuse for current supply.
- Do not reach into the operation area of the measuring shaft as long as it is in operation.
- Secure the rotating components of the measuring shaft against accidental contact. Provide for the necessary protection devices and covers.

2 Advice

2.4 Intended use

You may only assemble, operate and maintain the measuring shaft if you

- have carefully read through the operating/assembly instructions and understood them
- are technically qualified and specifically trained (e. g. safety, environment, logistics)
- are authorized by your company

The measuring shaft may only be used in accordance with the technical data (see chapter 1). Unauthorized modifications on the measuring shaft are not admissible. We will not assume liability for any damage that may arise. In the interest of further development we reserve the right for technical modifications.
The **DATAFLEX® torque measuring shaft** described in here corresponds to the state of the art at the time of printing of these operating/assembly instructions.

2.5 Reference to EC Machinery Directive 2006/42/EC

The measuring shafts supplied by KTR should be considered as components, not machines resp. partly completed machines according to EC Machinery Directive 2006/42/EC. Consequently KTR does not have to issue a declaration of incorporation. For details about safe assembly, start-up and safe operation refer to the present operating/assembly instructions considering the warnings.

3 Storage, transport and packaging

3.1 Storage

The **RADEX®-N** couplings are supplied in preserved condition. Both **DATAFLEX®** and **RADEX®-N** can be stored in a dry and roofed place for 6 - 9 months.

Humid storage rooms are not suitable.
Make sure that condensation is not generated. The best relative air humidity is less than 65 %.

3.2 Transport and packaging

In order to avoid any injuries and any kind of damage always make use of proper transport and lifting equipment.

The couplings are packed differently each depending on size, number and kind of transport. Unless otherwise contractually agreed, packaging will follow the in-house packaging specifications of KTR.

4 Assembly

The measuring shaft and the couplings are supplied as single pre-assembled subassemblies. Before assembly the measuring shaft has to be inspected for completeness.
The mounting position of **DATAFLEX®** is variable. The measurement system can be mounted both horizontally and vertically.

4.1 Components of DATAFLEX® torque measuring shaft

Components of DATAFLEX® torque measuring shaft

Component	Quantity	Component assembly
1	1	DATAFLEX® torque measuring shaft

Components of DATAFLEX® torque measuring shaft with RADEX®-N coupling

Component	Quantity	Component assembly
1	1	DATAFLEX® torque measuring shaft
2	2	Flange hub
3	2	Laminae set
4	2	Clamping ring hub with clamping ring
5	2	Flange hub for clamping set
6	2	CLAMPEX® clamping set KTR 620
7	2 / 4 [1)]	Setscrew DIN EN ISO 4029

1) RADEX®-N 135 = quantity 2; RADEX®-N 156 = quantity 4

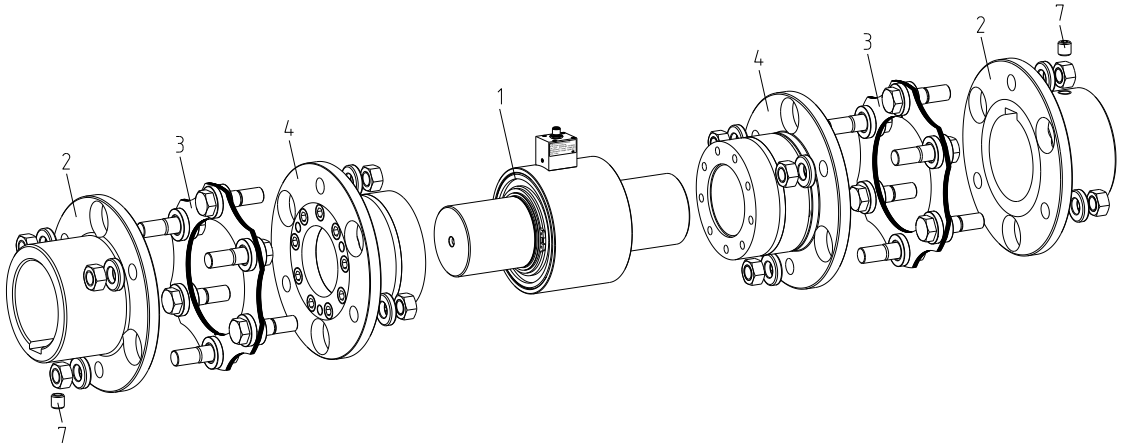

Illustration 4: DATAFLEX® 110/10000 torque measuring shaft with RADEX®-N 135

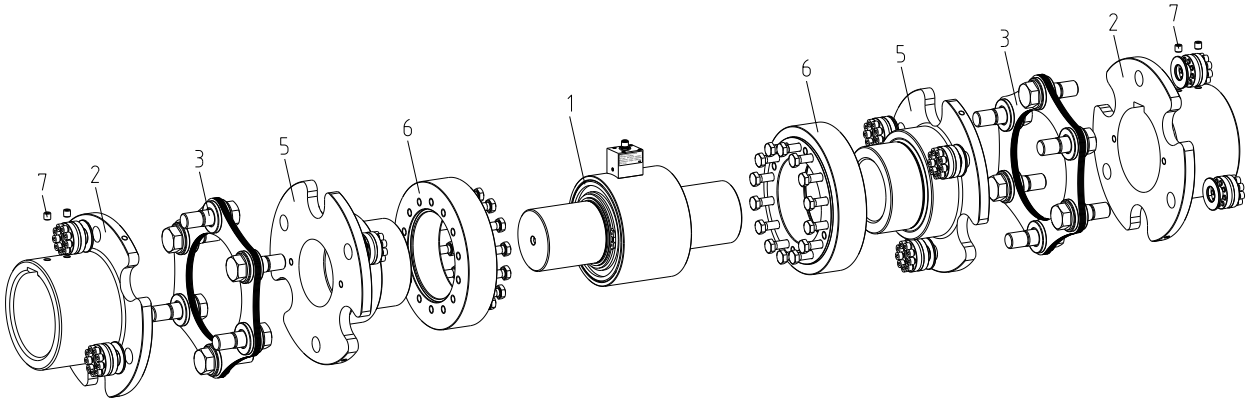

Illustration 5: DATAFLEX® 110/20000 torque measuring shaft with RADEX®-N 156

☞ **Consider our operating/assembly instructions KTR-N 47110 additionally when using the RADEX®-N coupling.**

4 Assembly

4.2 Advice for finish bore

STOP

The maximum permissible bore diameters D (see chapter 1 - technical data) must not be exceeded. If these figures are disregarded, the coupling may tear. Rotating particles may cause danger to life.

- Hub bores machined by the customer have to observe concentricity resp. axial runout (see illustration 6).
- Make absolutely sure to observe the figures for ØD.
- Carefully align the hubs when the finish bores are drilled.
- Provide for a setscrew according to DIN EN ISO 4029 with a cup point or an end plate to fasten the hubs axially.

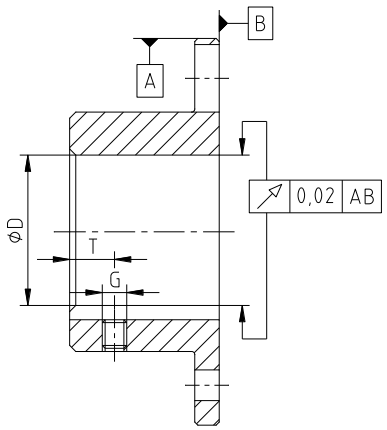

Illustration 6: Concentricity and axial runout

4.3 Displacements - alignment of the torque measuring shaft

The displacement figures specified in table 4 provide for sufficient safety to compensate for external influences like, for example, thermal expansion or foundation settling.

In order to ensure a long service life of the measuring shaft, the shaft ends have to be accurately aligned. Please absolutely observe the displacement figures specified (see table 4). If the figures are exceeded, the measuring shaft with coupling will be damaged.

Please note:

- The displacement figures specified in table 4 are maximum figures which must not arise in parallel. If axial, radial and angular displacement arises at the same time, these values must be reduced (see illustration 8).
- Inspect with a dial gauge, ruler or feeler gauge whether the permissible displacement figures specified in table 4 can be observed.

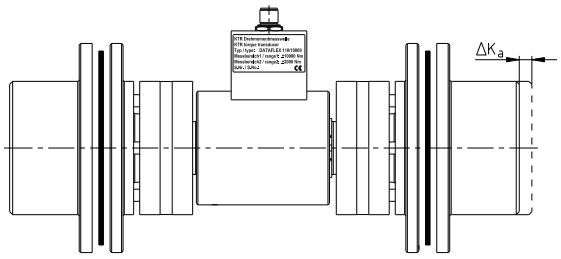

Axial displacement

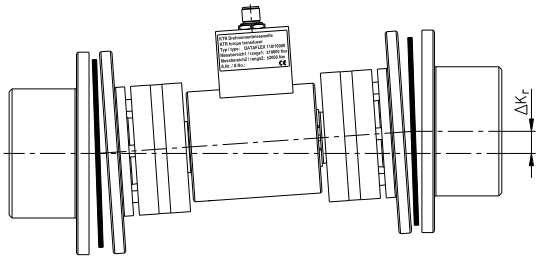

Radial displacement

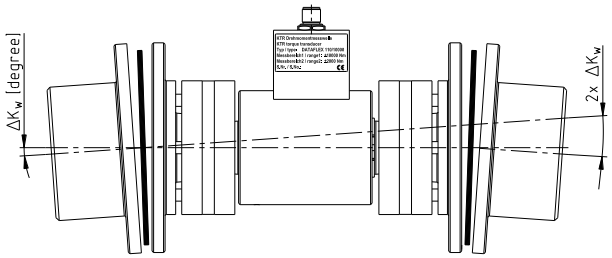

Angular displacement

Illustration 7: Displacements

4 Assembly

4.3 Displacements - alignment of the torque measuring shaft

Table 4: Displacement figures

DATAFLEX® size	RADEX®-N size	Max. axial displacement ΔK_a [mm]	Max. radial displacement ΔK_r [mm]	Max. angular displacement ΔK_w [degree] 1)
110/10000	135	3.5	7.8	1.0
110/20000	156	4.2	9.0	

1) each laminae set

Examples of the displacement combinations specified in illustration 8:

Example:
ΔK_r = 60%
ΔK_w = 20%
ΔK_a = 20%

$$\Delta K_{total} = \Delta K_a + \Delta K_r + \Delta K_w \leq 100\%$$

Illustration 8: Combinations of displacement

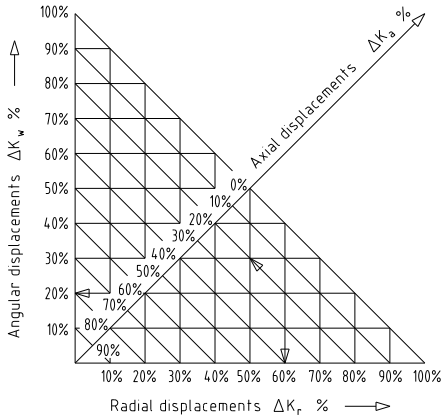

4.4 Assembly of the hubs

☞ **We recommend to inspect bores, shaft, keyway and feather key for dimensional accuracy before assembly.**

4 Assembly

4.5 Assembly of the RADEX®-N 135 on the DATAFLEX® torque measuring shaft

4.5.1 Assembly of the RADEX®-N 135 clamping ring hubs (component 4)

The power transmission is frictionally engaged. Fit pair of shaft-clamping ring hub is specified as H7/h6.

The following process should be observed with the assembly:

- Clean and degrease the contact surfaces of hub bores and shafts before assembly.

Oils and greases containing molybdenum disulfide or other high-pressure additives as well as internal lubricants must not be used.

- Lightly unscrew the clamping screws, push the clamping ring hub on the shaft of the measuring shaft and align to dimension L11.
- Tighten the clamping screws evenly crosswise. Increase the tightening torque gradually. Repeat this process until all clamping screws have reached the tightening torque specified in table 5.

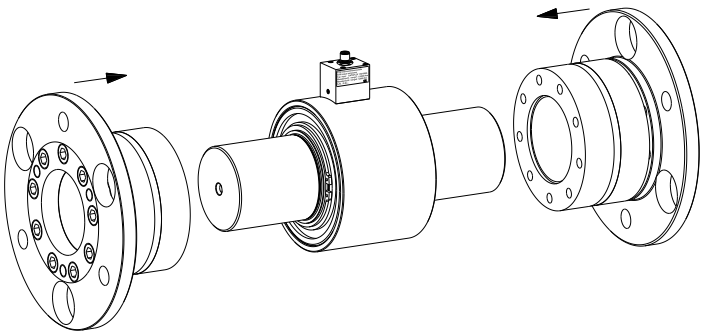

Illustration 9: Assembly of clamping ring hubs

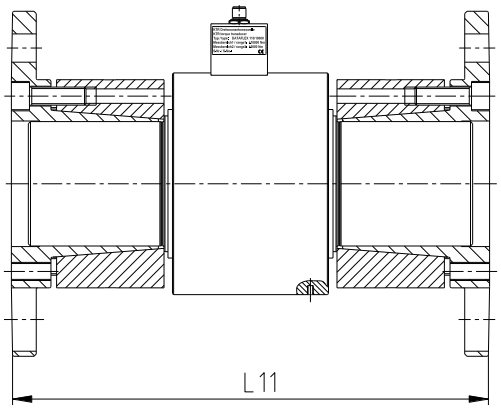

Illustration 10: Alignment to dimension L11

Table 5: Tightening torques of clamping screws

Coupling size of DATAFLEX®	**110/10000**
Coupling size of RADEX®-N	**135**
Size of clamping screws	M16
Tightening torque T_A [Nm]	295
Transmittable torque [Nm] 1) (frictional torque)	25000

1) H7/h6 shaft/hub fit

4.5.2 Assembly of RADEX®-N 135 flange hubs (component 2)

- Mount the hubs on the shaft of driving and driven side (see illustration 11). The shaft ends must not protrude on the internal sides of the hubs.
- Shift the power packs in axial direction until the distance dimension DBSE is achieved.
- If the power packs have already been firmly assembled, shifting the hubs axially on the shafts allows for adjusting the DBSE dimension (see illustration 12).

4 Assembly

4.5 Assembly of the RADEX®-N 135 on the DATAFLEX® torque measuring shaft

4.5.2 Assembly of RADEX®-N 135 flange hubs (component 2)

☞ **On request the hubs can be provided with a bore for setscrews for axial fastening. Please specify in your order.**

⚠ **With the assembly make sure that the distance dimension DBSE (see table 3) is observed. Disregarding this advice may cause damage to the measuring shaft (coupling).**

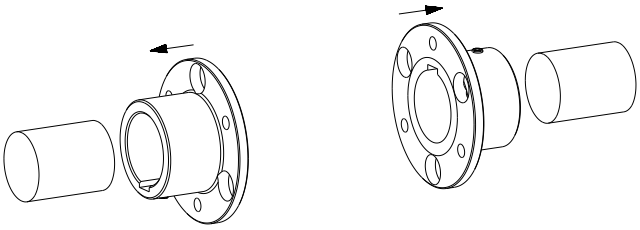

Illustration 11: Assembly of the hubs on the driving and driven side

Illustration 12: Alignment to dimension DBSE

4.5.3 Assembly of the laminae sets, RADEX®-N 135

⚠ **With the assembly make sure that the laminae sets are installed free from distortion in axial direction. Disregarding this advice may cause damage to the coupling.**

- Insert the laminae sets and the DATAFLEX® measuring shaft.
- Hand-tighten the components first, with the dowel screws to be assembled displaced from left to right (see illustration 13).
- Tighten the dowel screws to the tightening torques specified in table 6 by means of a suitable torque wrench.

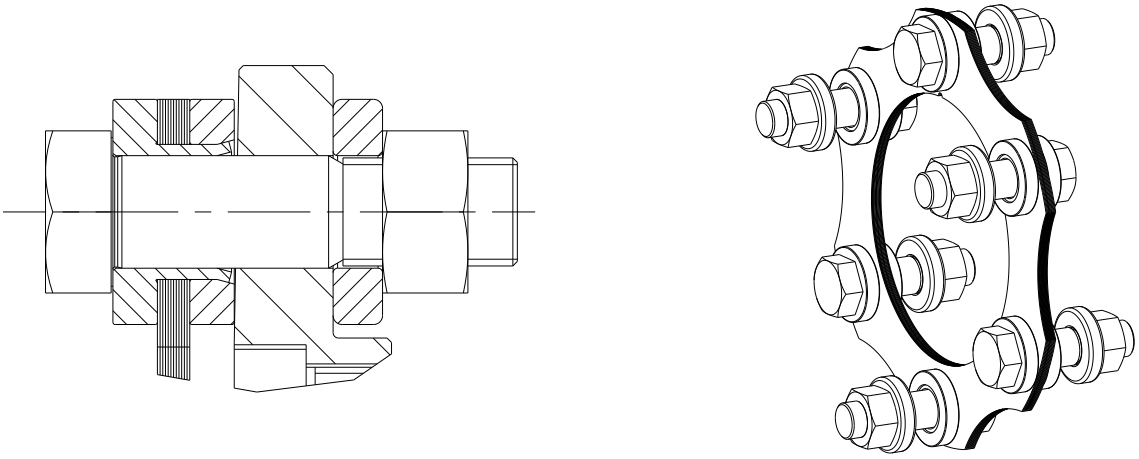

Illustration 13: Assembly of the laminae sets

4 Assembly

4.5 Assembly of the RADEX®-N 135 on the DATAFLEX® torque measuring shaft

4.5.4 Tightening torque of dowel screws of the RADEX®-N 135

The dowel screws have to be tightened to the tightening torques T_A specified in table 6.

Table 6: Tightening torques of dowel screws

Coupling size of DATAFLEX®	**110/10000**
Coupling size of RADEX®-N	**135**
Screw size	M24
Tightening torque T_A [Nm]	900

Having started up the coupling, the tightening torque of the dowel screws has to be inspected at regular maintenance intervals.

4.5.5 Advice for assembly of the RADEX®-N 135

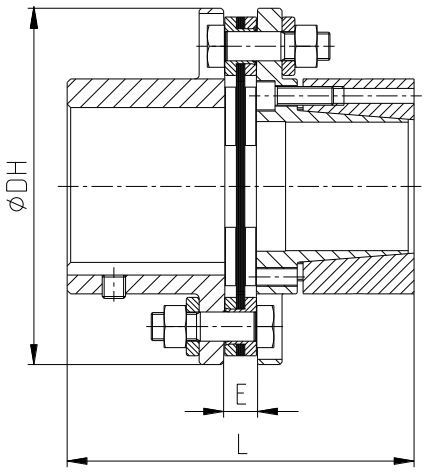

Illustration 14: Assembly of coupling

Table 7:

DATAFLEX® size	**110/10000**
RADEX®-N size	**135**
Mounting dimensions	
Dimension E	27
Dimension DH	305
Dimension L	297

4 Assembly

4.6 Assembly of the RADEX®-N 156 on the DATAFLEX® torque measuring shaft

4.6.1 Assembly of the RADEX®-N 156 flange hub with CLAMPEX® clamping set (component 5)

Inspect the taper surfaces and clamping screws of the clamping set for the lubrication specified.

Dirty or used clamping sets have to be disassembled and cleaned before assembly. Afterwards the taper surfaces and threads have to be lubricated with Molykote MoS_2 (see illustration 15). For re-lubrication use the multi-purpose grease Molykote G Rapid plus, as an example.

- Clean and degrease the contact surfaces of the shaft of DATAFLEX® and the bore of the flange hubs (component 5) (see illustration 15).

The contact surfaces of the shaft of DATAFLEX® and the flange bore must neither be lubricated nor oiled (see illustration 15).

- Unscrew the clamping screws by several revolutions so that the external ring detaches slightly from the internal ring.
- Afterwards position the clamping sets KTR 620 on the flange hubs (component 5) (see illustration 16 and illustration 17).

The external surface of the flange hub can be lubricated in the area of the external clamping set fit.

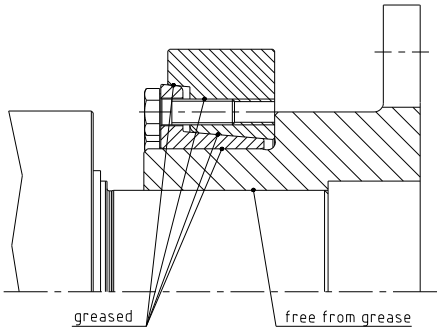

Illustration 15: Cleaning and lubricating the contact surfaces

- Push the flange hubs along with the clamping set on the shaft of DATAFLEX®.
- Hand-tighten the clamping screws first and align the clamping set with flange hub and the shaft of DATALFEX® and to dimension L11 (see illustration 19).

Mount the shaft before tightening the clamping screws.

- Tighten the clamping screws gradually in several revolutions evenly one after another until the front surfaces on the screw head side of external and internal ring are flush. Consequently correct clamping of external and internal ring can be inspected visually (see illustration 18 and 19).
  When tightening the clamping screws the maximum screw tightening torque specified (see table 8) must not be exceeded.

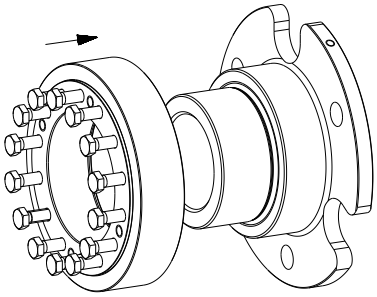

Illustration 16: Pushing the clamping set on the flange hub

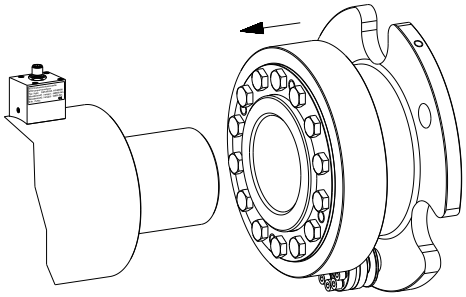

Illustration 17: Pushing on the shaft of DATAFLEX®

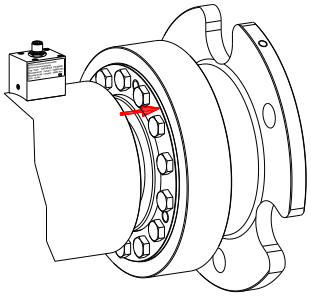

Illustration 18: Visual inspection

During assembly the hub is not displaced axially to the shaft with KTR 620.

4 Assembly

4.6 Assembly of the RADEX®-N 156 on the DATAFLEX® torque measuring shaft

4.6.1 Assembly of the RADEX®-N 156 flange hub with CLAMPEX® clamping set (component 5)

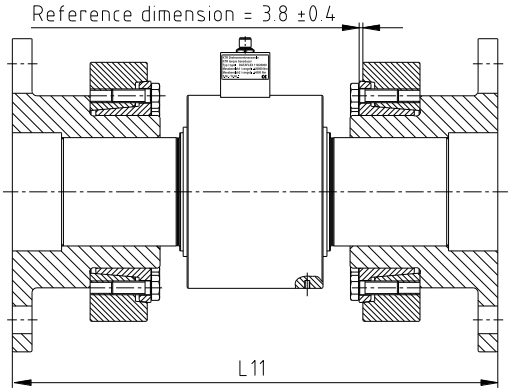

Illustration 19: Alignment to dimension L11

Table 8: Tightening torques of clamping screws

Coupling size of DATAFLEX®	**110/20000**
Coupling size of RADEX®-N	156
Size of clamping screws	M14
Tightening torque T_A [Nm]	160
Transmittable torque [Nm] 1) (frictional torque)	27000

1) Fit H7/h6 between the shaft of DATAFLEX® and flange hub

4.6.2 Assembly of RADEX®-N 156 flange hubs (component 2)

- Mount the hubs on the shaft of driving and driven side (see illustration 20). The shaft ends must not protrude on the internal sides of the hubs.
- Shift the power packs in axial direction until the distance dimension DBSE is achieved.
- If the power packs have already been firmly assembled, shifting the hubs axially on the shafts allows for adjusting the DBSE dimension (see illustration 21).

☞ **On request the hubs can be provided with a bore for setscrews for axial fastening. Please specify in your order.**

⚠ **With the assembly make sure that the distance dimension DBSE (see table 3) is observed. Disregarding this advice may cause damage to the measuring shaft (coupling).**

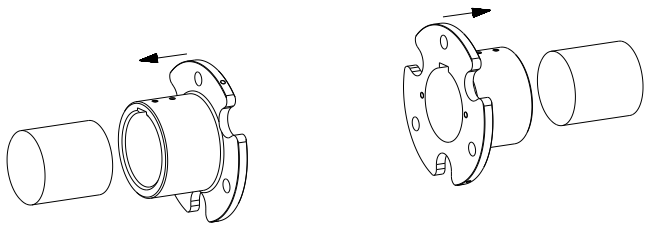

Illustration 20: Assembly of the hubs on the driving and driven side

Illustration 21: Alignment to dimension DBSE

4 Assembly

4.6 Assembly of the RADEX®-N 156 on the DATAFLEX® torque measuring shaft

4.6.3 Assembly of the laminae sets, RADEX®-N 156

With the assembly make sure that the laminae sets are installed free from distortion in axial direction. Disregarding this advice may cause damage to the coupling.

- Clean and degrease the contact surfaces of screw connections on the flange hubs and laminae set as well as the threads of the clamping nut and dowel screw.
- Insert the laminae sets and DATAFLEX® with flange hubs (see illustration 22).
- Hand-tighten the components first, the dowel screws to be assembled reciprocally (see illustration 22).
- The pressure screws in the clamping nut must not protrude on the pressure side (see illustration 23).

All components must be superimposed without any gap.

- Afterwards turn back the clamping nut until there is a gap of 1 - 2 mm (see illustration 23).
- Hand-tighten the pressure screws marked in illustration 25.
- Tighten these screws (see illustration 25) at half the tightening torque according to table 10 and afterwards at the full tightening torque according to table 10.
- Now tighten all pressure screws one after another and with several revolutions until all screws have achieved the full tightening torque (see illustration 26).

The pressure screws must <u>not</u> bear on the heads after assembly (see illustration 24).

- All clamping nuts have to be mounted as per the aforementioned process.

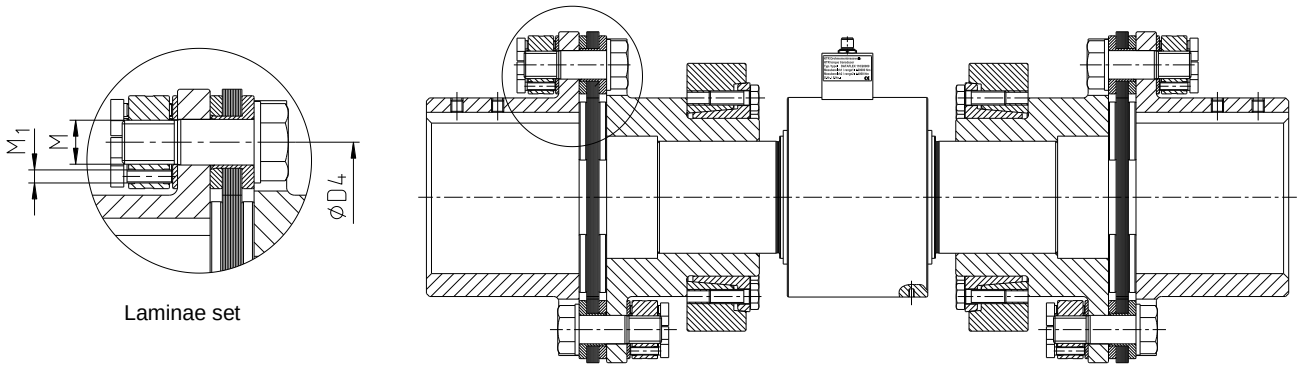

Illustration 22: Assembly of laminae sets, RADEX®-N size 156

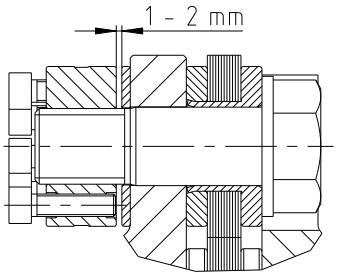

Illustration 23

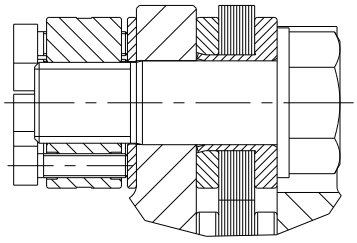

Illustration 24

4 Assembly

4.6 Assembly of the RADEX®-N 156 on the DATAFLEX® torque measuring shaft

4.6.4 Assembly/disassembly of the laminae sets, RADEX®-N 156

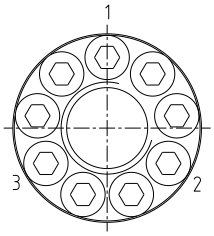

Pitch 9

Illustration 25: Tightening of pressure screws

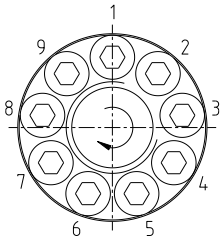

Pitch 9

Illustration 26: Tightening of pressure screws (one after another)

Table 9:

Coupling size of RADEX®-N	156
Pitch circle ØD4	260

Disassembly:

Driving components falling down may cause injury to persons or damage on the machine. Secure the driving components before disassembly.

- Untighten the pressure screws of the clamping nut with several revolutions each by a quarter revolution until all screws are released from tension.

Do not relieve and unscrew individual pressure screws completely in any case.

- Unscrew the clamping nuts and remove the washers.
- Take out the laminae sets.

4.6.5 Tightening torques of screw connections on the laminae set

Table 10: Tightening torque of screw connections on the laminae set

Coupling size of RADEX®-N	156
Dimension M [mm]	M27
Dimension M1 [mm]	9 x M8
Pressure screw M1 - Tightening torque T_A [Nm]	30

Having started up the coupling, the tightening torque of the screw connections has to be inspected at regular maintenance intervals.

4 Assembly

4.6 Assembly of the RADEX®-N 156 on the DATAFLEX® torque measuring shaft

4.6.6 Advice for assembly of the RADEX®-N 156

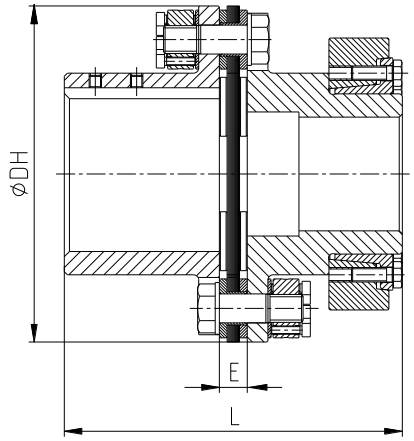

Illustration 27: Assembly of coupling

Table 11:

DATAFLEX® size	**110/20000**
RADEX®-N size	**156**
Mounting dimensions	
Dimension E	27
Dimension DH	325
Dimension L	327

4.7 Advice for assembly of the DATAFLEX® torque measuring shaft

- **Fixing the housing**

The housing must be protected from rotation. For that purpose there is a thread size M5 at the bottom side. Make absolutely sure to avoid rigid fixing of the housing!

Opening the housing is not required and may cause damage to the measuring shaft.

- **Level of protection**
  All DATAFLEX® measuring shafts type 110 correspond to protection class IP51 according to DIN EN 60529.

- **Maintenance**
  The DATAFLEX® measuring shaft is maintenance-free. Lubrication or cleaning is not necessary.

- **Calibration**
  The transducer is calibrated when supplied. We recommend an annual inspection of the calibration.

4 Assembly

4.8 Technical description

1. General description

The measuring shafts type DATAFLEX® 110 are provided with wire strain gauges (DMS) the signals of which are transmitted contactlessly.
In addition, a two-channel shaft encoder provides two speed signals shifted by 90 degrees. Each signal has a resolution of 720 periods per revolution. The measuring shaft is connected to the connection housing DF2 via the connection cable which is available as an accessory.

☞ **The measuring shaft should not be switched on before all connections have been properly connected. After initial switch-on the measuring shaft needs about 5 minutes until the warm-up period is finished and the measurement device has its standard accuracy.**

2. Connection housing DF2

The connection housing DF2 has 12 screw terminals to connect power supply, display equipment and switches.
The torque signal is displayed as proportional direct voltage from -10 … 10 V.
For the speed display two square wave signals, one scalable voltage signal and one direction signal are available (for pin configuration see table 12).
The button T1 serves for programming and can be bridged externally against GND via the terminal 12 (T1).

Table 12: Pin assignment of the connection housing DF2

No.	Description	Function	Properties
Input of operating voltage			
10	24V	Supply voltage +	24 V DC ± 4 V / 100 mA
11	GND	Supply voltage -	
Torque output			
4	M-U	Voltage output +	-10 V ... 10 V (R_A = 1 kΩ)
5	GND	Ground of torque output	
6	M-I	Without function	
Speed output pulse signal			
7	N1	Pulsed output speed track 1	HTL (24V, 720 pulses/rev.) TTL (5V, 720 pulses/rev.)
8	GND	Ground of pulsed output	
9	N2	Pulsed output speed track 2	HTL (24V, 720 pulses/rev.) TTL (5V, 720 pulses/rev.)
Speed output DC-voltage			
1	R/L	Direction signal speed	HTL (24V, clockwise = 0) TTL (5V, clockwise = 0)
2	GND	Ground for DC speed output	
3	N-U	Speed of direct voltage output	0 V ... 10 V (scalable)
Other connections / operating devices			
12	T1	Push button T1	External push button connection T1
13	L1, L2	Signal LEDs	
14	T1, T2	Sensor T1, T2	Sensor for programming
15	TP	Switch low pass	On/off switch low-pass
16	-	Connection of measuring shaft	Connection cable
17	-	Switch for speed scaling	see table 16

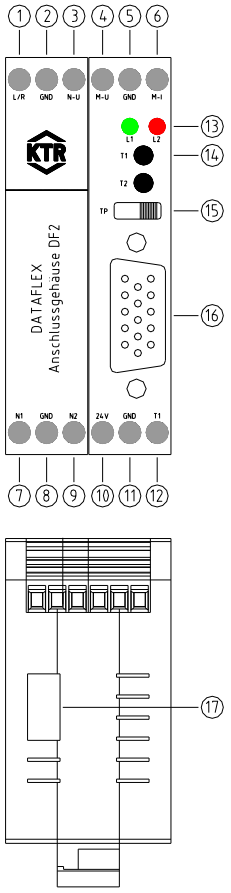

Illustration 28:
Connection housing DF2

4 Assembly

4.8 Technical description

3. Description of connections

a) Supply voltage 24V (No. 10 and 11)

The supply voltage is 24V ± 4V direct current voltage (DC). The current consumption is 100 mA at the maximum.

b) Torque signal M-U (No. 4 and 5)

The output voltage is proportional to the torque with an output of values between -10V and 10V. Table 13 shows the relation between torque and output voltage.

Table 13: Assignment of torque - output values

DATAFLEX® size	Measuring range 1 ΔM / ΔU	Measuring range 2 ΔM / ΔU
110/10000	1000 Nm / V	200 Nm / V
110/20000	2000 Nm / V	400 Nm / V

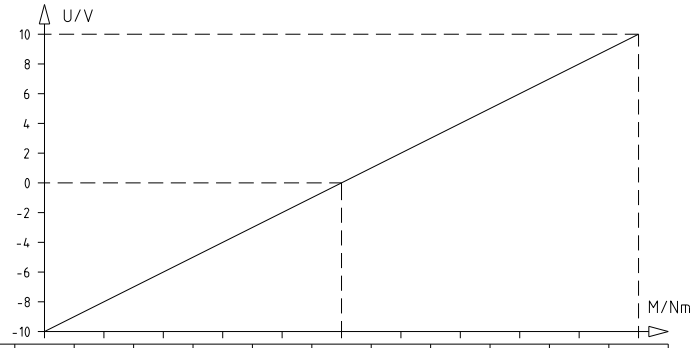

DATAFLEX 110/10000	-10000 (-2000)	-8000 (-1600)	-6000 (-1200)	-4000 (-800)	-2000 (-400)	0	2000 (400)	4000 (800)	6000 (1200)	8000 (1600)	10000 (2000)
DATAFLEX 110/20000	-20000 (-4000)	-16000 (-3200)	-12000 (-2400)	-8000 (-1600)	-4000 (-800)	0	4000 (800)	8000 (1600)	12000 (2400)	16000 (3200)	20000 (4000)

Illustration 29: Assignment of torque - output values Measuring range 1 (measuring range 2)

c) Filter voltage output (No. 15)

The torque signal may be filtered by activating a low-pass filter so that high-frequency shares of the signal are suppressed.

Table 14: Low pass switch (No. 15)

Switch position TP	Left	Right
	Low pass on	Low pass off

The limit frequency of the filter can be changed by varying the DIP switches (see illustration 30) inside the connection housing:

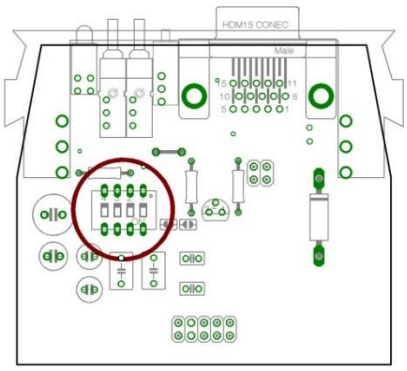

Illustration 30: Position of DIP switch

Table 15: Adjustment of the requested filter frequency

Limit frequency [Hz]	Switch 1	Switch 2	Switch 3	Switch 4
2000	**OFF**	**OFF**	**OFF**	**OFF**
1000	**ON**	OFF	OFF	OFF
100	OFF	**ON**	OFF	OFF
10	OFF	OFF	**ON**	OFF
1	OFF	OFF	OFF	**ON**

A filter frequency of 1000 Hz is preset.

4 Assembly

4.8 Technical description

d) Speed signals N1, N2, N-U, R/L (No. 1, 3, 7, 9)

The connection housing DF2 has 4 connections for speed output:

- Two square-wave signals shifted by 90 degrees (N1, N2)
- A scalable voltage output (N-U) with direction signal (R/L)

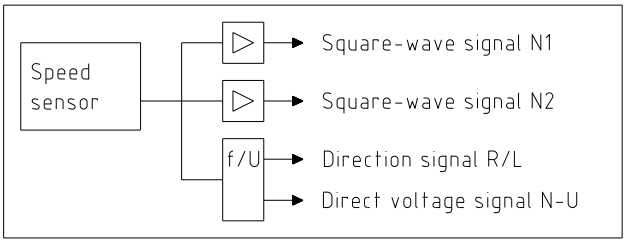

Illustration 31

Outputs N1 and N2

Each of the speed outputs N1 and N2 provide a square-wave signal with a resolution of 2x 720 periods per revolution (see illustration 32).

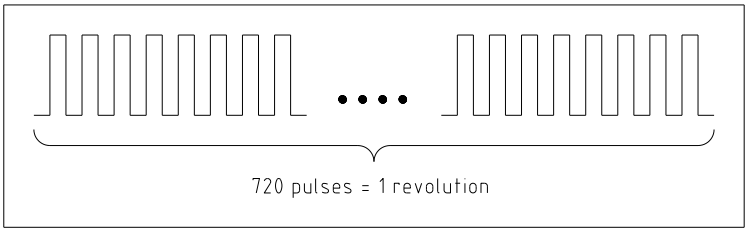

Illustration 32

The speed is calculated as follows: **N [rpm] = f [Hz] / 7.5**

The speed channel signals N1 and N2 have a phase shift of 90 degrees to each other. Depending on the rotational direction one of the two signals leads 90° in phase (see illustration 33).

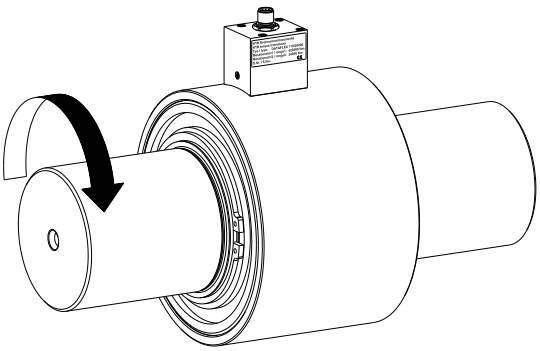

Clockwise

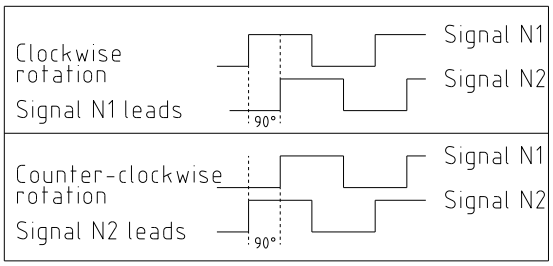

Illustration 33

4 Assembly

4.8 Technical description

Output circuit (connection N1 and N2)

The speed outputs N1 and N2 have short-circuit proof push-pull outputs providing a square-wave voltage with an amplitude of 24V and a maximum switching current of 30 mA. The output terminals must not be charged with an external voltage (see illustration 34).

The output voltage of speed lines and torsional direction line can be varied by modifying the jumper position in the connection housing to 5V level (see illustration 35).

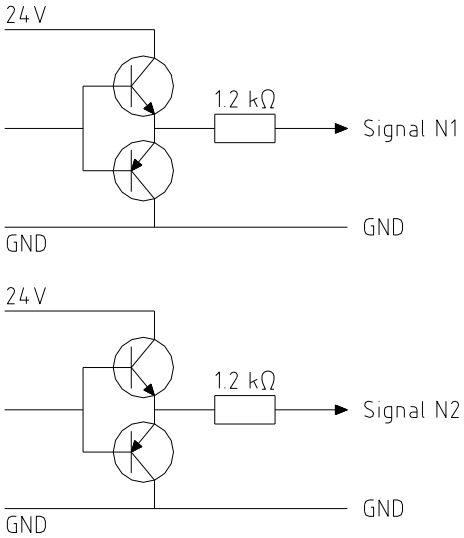

Illustration 34: Output circuit of speed outputs

Outputs N1, N2, R/L = 24Vss:

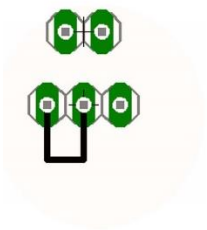

Outputs N1, N2, R/L = 5Vss:

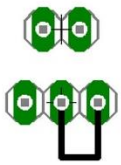

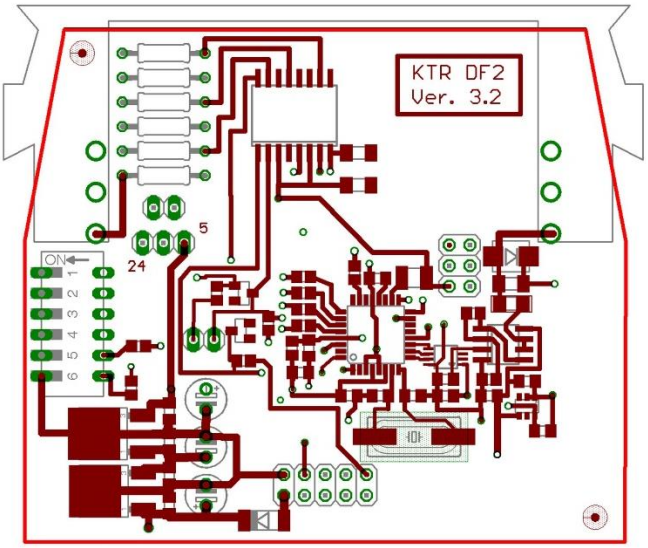

Illustration 35: Modification of voltage level for the speed signal/direction signal

4 Assembly

4.8 Technical description

Outputs N-U and R/L

The KTR connection housing DF2 has an integrated f/U converter which converts the square wave signals of the encoder into a linear DC voltage output (terminal N-U) and generates an additional signal for the rotational direction (terminal R/L).
On the bottom side of the connection housing DF2 there is a sixfold multiple switch allowing to adapt the scaling of the speed signal to the type of measuring shaft and the speed range (see illustration 28 and 35).

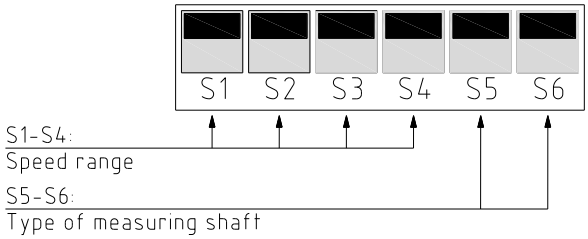

Illustration 36: Switch positions

Scaling of the speed direct voltage output

Table 16: Switch position S1-S4 and the corresponding scale of the speed output N-U

Max. speed	Scaling	S1	S2	S3	S4
10	1 rpm / V	0	0	0	0
20	2 rpm / V	0	0	0	1
40	4 rpm / V	0	0	1	0
60	6 rpm / V	0	0	1	1
80	8 rpm / V	0	1	0	0
100	10 rpm / V	0	1	0	1
200	20 rpm / V	0	1	1	0
400	40 rpm / V	0	1	1	1
600	60 rpm / V	1	0	0	0
800	80 rpm / V	1	0	0	1
1000	100 rpm / V	1	0	1	0
2000	200 rpm / V	1	0	1	1
4000	400 rpm / V	1	1	0	0
6000	600 rpm / V	1	1	0	1
8000	800 rpm / V	1	1	1	0
10000	1000 rpm / V	1	1	1	1

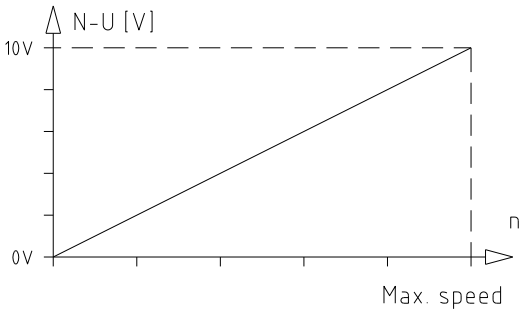

Illustration 37

Table 17: Selection of DATAFLEX® series

DATAFLEX® type	S5	S6
DATAFLEX® 22, 42, 85, 140	0	0
DATAFLEX® 16	1	1
DATAFLEX® 32, 42 (red), 110	0	1
DATAFLEX® 70	1	0

Table 18: Direction signal

Output voltage R/L	Torsional direction
0	Clockwise
24V	Counterclockwise

The signal of the speed direction output R/L shows the rotational direction (see table 18).

* Switching between 5V and 24V possible (see illustration 35 *Modification of voltage level for the speed signal/direction signal*)

4 Assembly

4.8 Technical description

e) Control buttons and LEDs (No. 12 to 14 and illustration 38)

The connection housing DF2 has two LEDs and two push buttons for visual inspection allowing to change settings.

5 Special functions

The following settings can be made by means of sensors:

1) Self-test
2) Measuring range switchover
3) Automatic zero adjustment
4) Manual zero adjustment

For safety reasons the settings „1) self-test“ and „2) measuring range switchover“ can only be made up to 15 seconds after powering up. „3) Automatic zero adjustment“ and „4) manual zero adjustment“ can only be made from 15 seconds after powering up.
The termination of the 15 seconds period is signalized by short blinking of the LEDs on the connection housing.

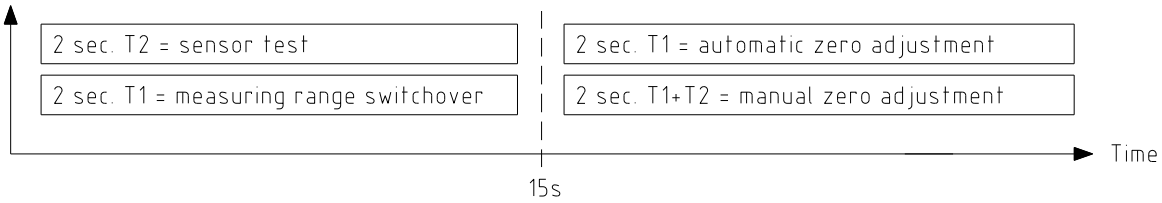

Illustration 38

5.1 Sensor test

The torque sensor can be inspected for operativeness if the sensor T2 is pressed for 2 seconds during the first 15 seconds after powering up the measuring shaft. If the sensor is fine, the output voltage increases to approx. 4 volts for the period of 2 seconds. The output voltage increases to approx -10 volts for 2 seconds in the measuring range 2.

☞ • **The sensor test can only be performed during the first 15 seconds after powering up.**

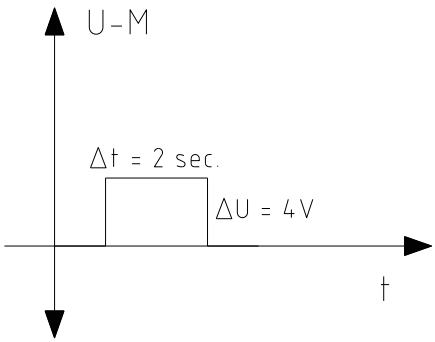

Illustration 39: Sensor test

5 Special functions

5.2 Measuring range switchover

The measuring range can be switched over within the first 15 seconds after powering up the supply voltage. For that purpose press the button T1 on the connection housing DF2 during 2 seconds. The selected measuring range is displayed by green LEDs on DF2.

Green LED off	=	measuring range 1 (e. g. 10000 Nm)
Green LED permanently on	=	measuring range 2 (e. g. 2000 Nm)

The selected measuring range remains set after powering on again.

5.3 Automatic zero adjustment (see illustration 31)

If the „push button“ T1 is activated for a period of 2 seconds, the output of the torque signal is automatically set to 0 Volt. The adjusting is effected irrespective of the amount of the actual torque.
The termination of the adjustment is confirmed by fast blinking of the LED L1. The new zero point has been saved and the device is in the measuring mode again.

☞

- **The automatic zero adjustment can only be performed if the measuring shaft is switched on for more than 15 seconds.**
- **If necessary, the automatic zero adjustment can be performed by an external control, too. If the potential of the terminal clamp T1 is connected with GND for 2 seconds, an automatic zero adjustment is performed.**

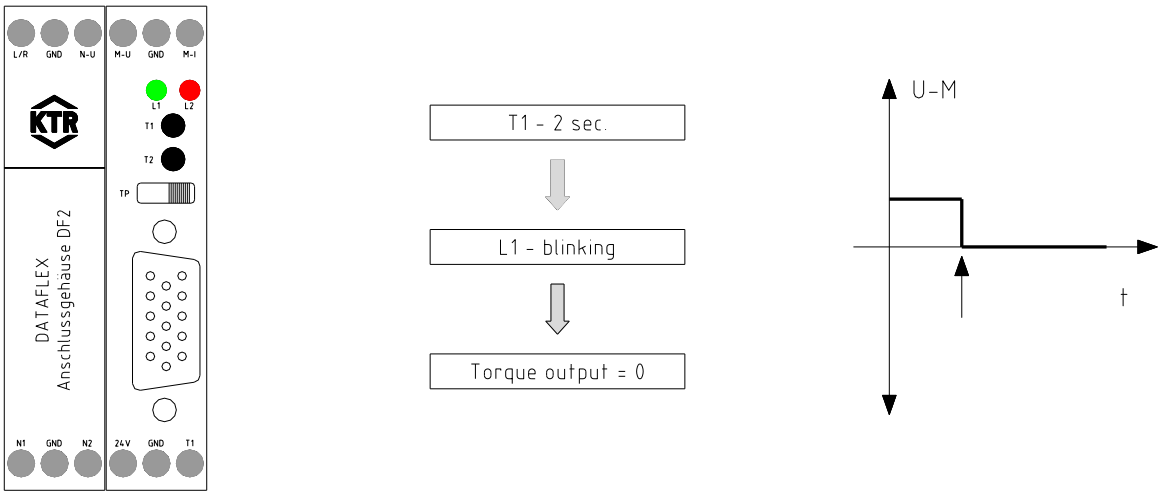

Illustration 40: Automatic zero adjustment

5.4 Manual zero adjustment

The zero point of the torque output can be adjusted manually. For this purpose both push buttons T1 and T2 are activated simultaneously for 2 seconds. The LED L1 is blinking four times.
Pressing the push button T1 increases the voltage, pressing the push button T2 reduces the voltage. The modifications are accelerated if the corresponding push button is pressed permanently. Each amendment is confirmed by short blinking of the LED L2.
Having performed the adjusting the new values are stored lastingly by pressing both push buttons again for 2 seconds. The LED L1 is illuminated once and signalizes the return to the measuring mode.

The manual zero adjustment can be set separately for the two measuring ranges. The zero point of the range that is currently activated is generally adjusted.

5 Special functions

5.4 Manual zero adjustment

- **The manual zero adjustment can only be performed if the measuring shaft is switched on for more than 15 seconds and the signal has levelled off.**

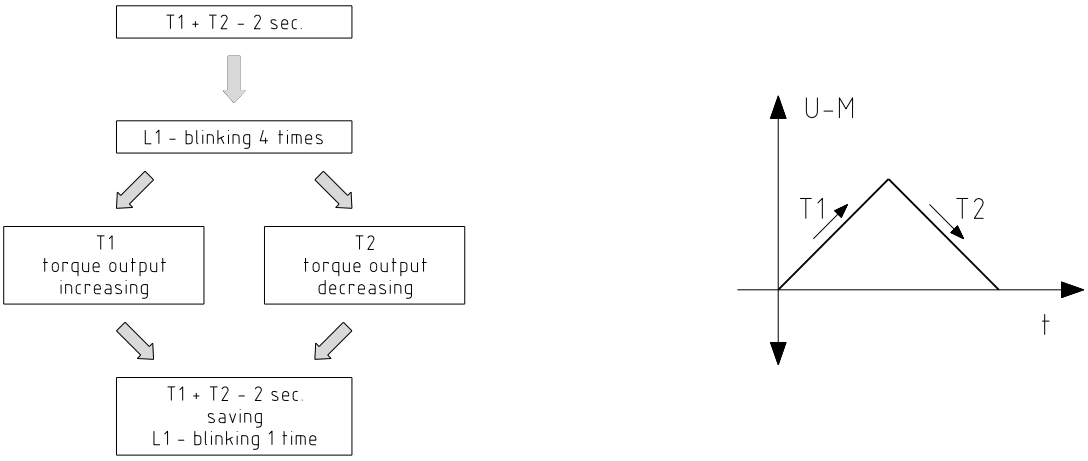

Illustration 41: Manual zero adjustment

6 Disposal

In respect of environmental protection we would ask you to dispose of the packaging resp. products on termination of their service life in accordance with the legal regulations resp. standards that apply.

7 Maintenance and service

DATAFLEX® is a low-maintenance torque measuring shaft. We recommend to perform a visual inspection on the torque measuring shaft **at least once a year**. Pay special attention to the condition, alignment and screw connection of the torque measuring shaft and the condition of the laminae sets of the RADEX®-N coupling.

Having started up the torque measuring shaft the tightening torques of the screws have to be inspected during the usual inspection intervals.

Consider our operating/assembly instructions KTR-N 47110 additionally when using the RADEX®-N coupling.

8 Services, customer service addresses

If requested, we are pleased to perform the calibration of your torque measuring shaft and other services.

Contact addresses of the KTR partners for spare parts and orders can be obtained from the KTR homepage at www.ktr.com.

☞ **KTR does not assume any liability or warranty for the use of spare parts and accessories which are not provided by KTR and for the damages which may incur as a result.**

KTR Systems GmbH
Carl-Zeiss-Str. 25
D-48432 Rheine
Phone: +49 5971 798-0
E-mail: mail@ktr.com

9 Declarations of conformity

9.1 EU Declaration of conformity

EU Declaration of conformity

The manufacturer - KTR Systems GmbH, Carl-Zeiss-Str. 25, D-48432 Rheine - states that the

DATAFLEX® torque measuring shaft

described in the present operating/assembly instructions is in accordance with the following directive:

2014/30/EU	*Directive of the European Parliament and European Council dated February 26. 2014 for harmonizing the legal provisions of the member states regarding electromagnetic compatibility*

Standards applied:

EN IEC 61000-6-2:	Immunity standard for industrial environments
EN 61000-4-2:	Electrostatic discharge immunity test (ESD)
EN IEC 61000-4-3:	Radiated, radio-frequency, electromagnetic field immunity test
EN 61000-4-4:	Electrical fast transient/burst immunity test
EN 61000-4-6:	Immunity to conducted disturbances, induced by radio-frequency fields
EN IEC 61000-6-4:	Emission standard for industrial environments
EN 55011:	Intensity of radio interference area (class B)

Rheine,	2022-08-25	i. V.	i. A.
Place	Date	Reinhard Wibbeling Engineering/R&D	Jürgen Kösters Product Manager

9 Declarations of conformity

9.2 UK Declaration of conformity

UK Declaration of conformity

The manufacturer - KTR Systems GmbH, Carl-Zeiss-Str. 25, D-48432 Rheine - states that the

DATAFLEX® torque measuring shaft

described in the present operating/assembly instructions is in accordance with the following directive:

SI 2016/1091 Electromagnetic Compatibility Regulations 2016

Standards applied:

EN IEC 61000-6-2:	Immunity standard for industrial environments
EN 61000-4-2:	Electrostatic discharge immunity test (ESD)
EN IEC 61000-4-3:	Radiated, radio-frequency, electromagnetic field immunity test
EN 61000-4-4:	Electrical fast transient/burst immunity test
EN 61000-4-6:	Immunity to conducted disturbances, induced by radio-frequency fields
EN IEC 61000-6-4:	Emission standard for industrial environments
EN 55011:	Intensity of radio interference area (class B)

Authorised representative:

KTR U.K. Ltd.
Robert House
Unit 7, Acorn Business Park
Woodseats Close
Sheffield
United Kingdom, S8 0TB

Year of UKCA marking: 2022

Rheine,	2022-08-25	i. V.	i. A.
Place	Date	Reinhard Wibbeling Engineering/R&D	Jürgen Kösters Product Manager