ZVS-Viewer (c)2014

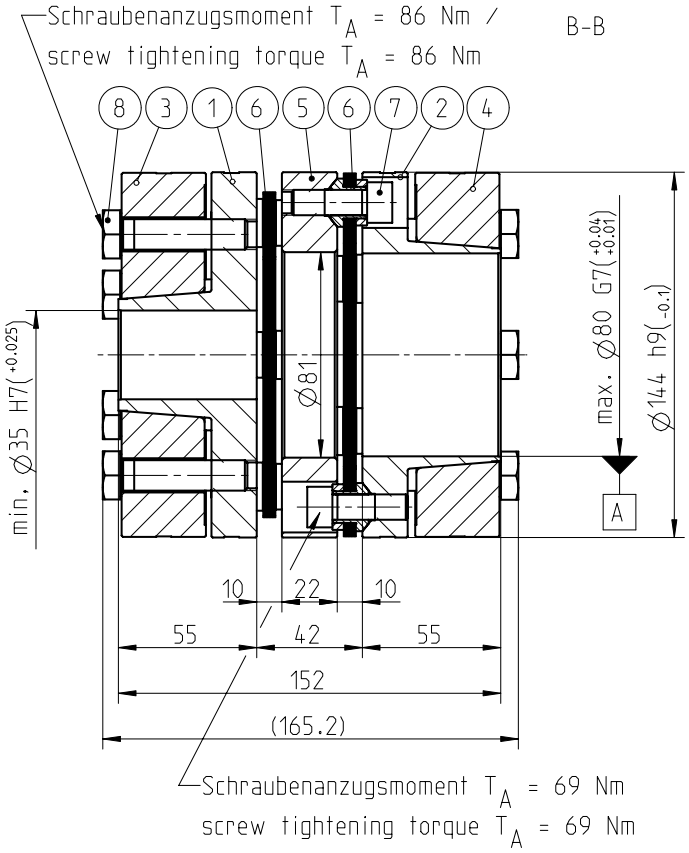

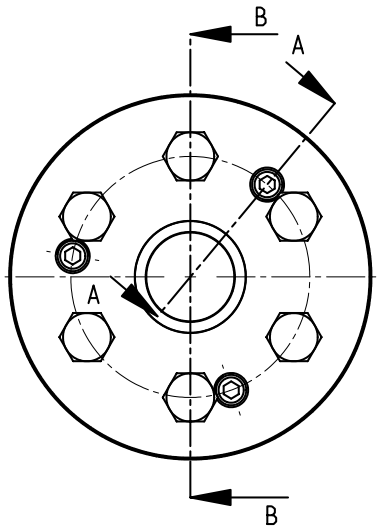

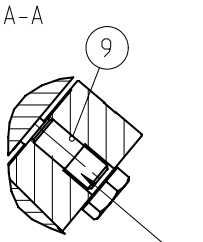

Gewindestifte M12 zur Demontage/
set screws M12 for disassembly

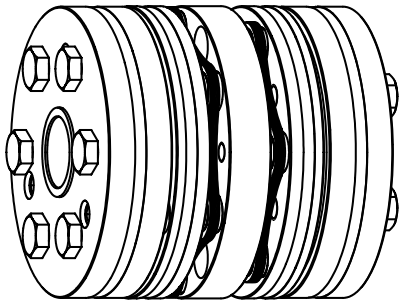

2:5

Reibschlussmoment / transmittable friction torque:

Ø 35H7/k6 T_R= 951 Nm
Ø 35H7/h6 T_R= 880 Nm

Ø 80G7/m6 T_R= 3252 Nm
Ø 80H7/h6 T_R= 3168 Nm

Werkstoff/ material: Pos. 1 - 5 = Aluminium

Coupling data		Permissible misalignments		
Nominal torque T_{KN}	2000 Nm	Angular (each lamina)	Axial	Radial
Maximum torque T_{Kmax}	3000 Nm			
Moment of inertia	0,017621 kgm^2	1,0°	2,6 mm	0,56 mm
max. speed	10000 rpm	max. figures not occur simultaneously		

Schutzvermerk ISO 16016 beachten
Note protection mark acc. to ISO 16016

Massstab Scale	1:2	Format Size	A3

RADEX-NC 61
DK With Clamping Ring Hub

RADEX-NC 61
DK mit Spannringnabe

	gezeichnet drawn	Werkstoff Material		Kz	Lfd.-Nr. Current number	Index Rev.
Datum Date	27.07.21	Norm Standard		M	785275	1
Name	SIS	Gewicht Weight	5.775 kg			

KTR

NAME:N.SILIES OBJECT:785275 DATE:27-Jul-21 11:15:04