ZVS-Viewer (c)2014
NAME:J.SCHOMAKER OBJECT:695273 DATE: 5-Apr-22 11:31:37

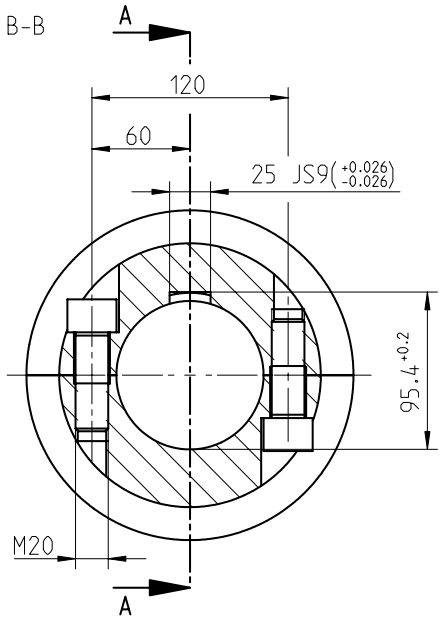

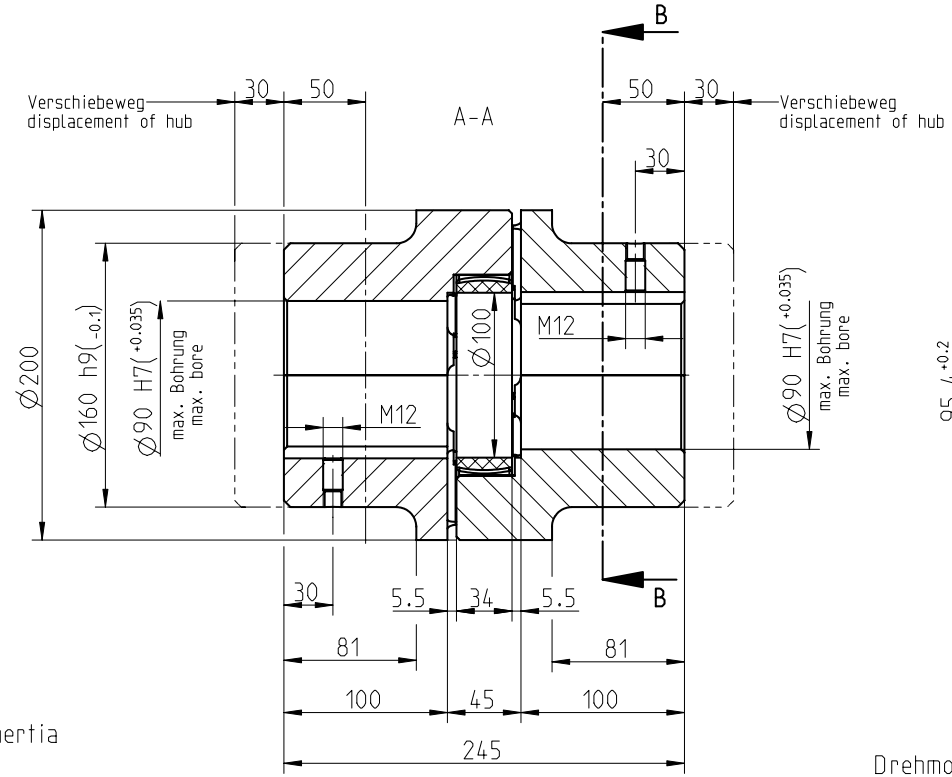

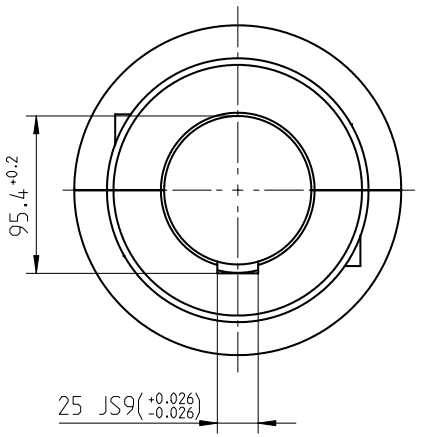

Massentraegheitsmoment / Mass moment of inertia
$J_{Ges.}$ = 0.129185 kgm^2

Drehmoment / Torque
Zahnkranz / spider 92 Sh-A T-PUR
T_{KN} = 2400 Nm
T_{Kmax} = 4800 Nm

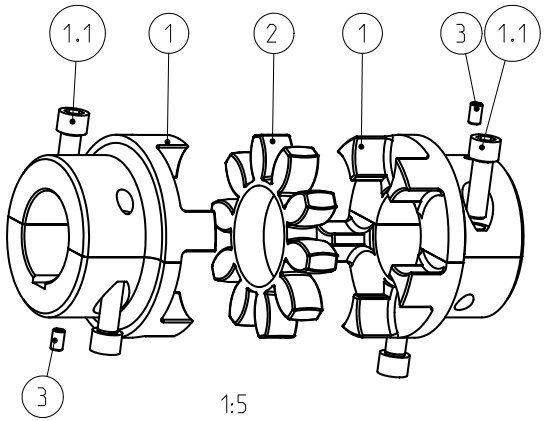

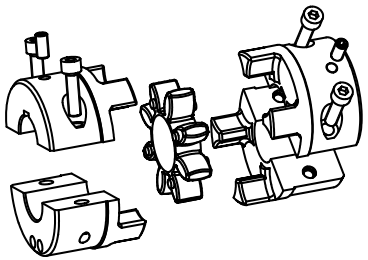

Prinzipskizze
principle sketch

Schraubenanzugsmoment Teil 1.1 / screw tightening torque part 1.1
DIN EN ISO 4762 - M20x60 - 12.9, T_A = 560 Nm

Nabenwerkstoff / hub material = EN-GJL-250

Paßfedernute nach DIN 6885 Bl. 1-JS9
keyway acc. to DIN 6885 sheet 1-JS9

				Schutzvermerk ISO 16016 beachten Note protection mark acc. to ISO 16016			
				Massstab Scale	13:40	Format Size	A3
ROTEX 90 SH				ROTEX 90 SH			
	gezeichnet drawn	Werkstoff Material		Kz	Lfd.-Nr. Current number	Index Rev.	KTR
Datum Date	10.03.22	Norm Standard		M	695273	3	
Name	FES	Gewicht Weight	25.641 kg				