ZVS-Viewer (c)2014
NAME:F.KERKHOFF OBJECT:638383 DATE:04-Jul-19 14:10:10

B-B

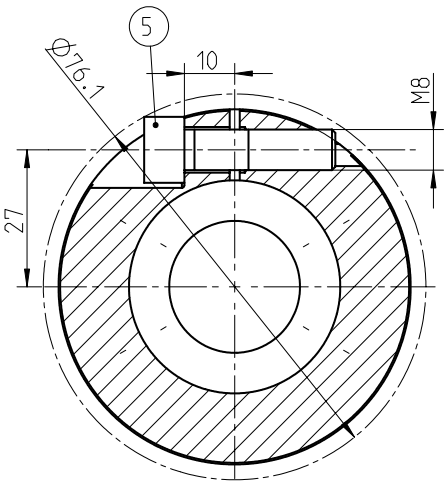


A-A

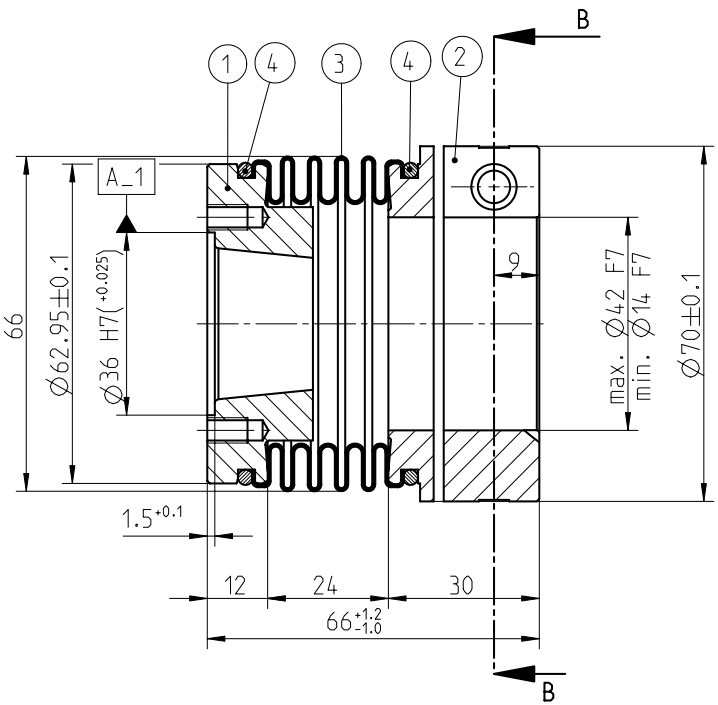


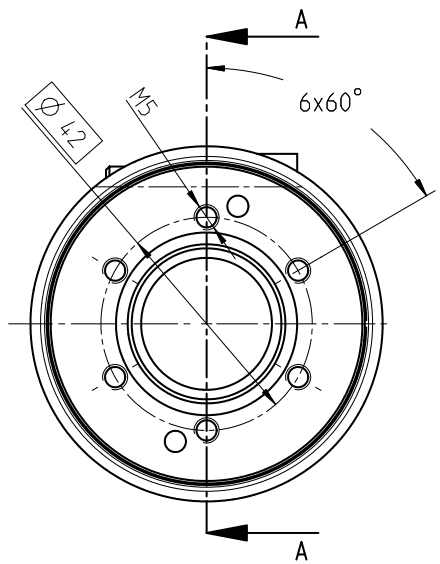


Schraubenanzugsmoment (5) $T_A$= 25 Nm
screw tightening torque (5) $T_A$= 25 Nm
Passfedernute nach DIN 6885 Bl. 1-JS9
feather key groove acc. to DIN 6885 sheet 1-JS9

Drehmoment / Torque
Balg / bellow
$T_{KN}$ = 95 Nm

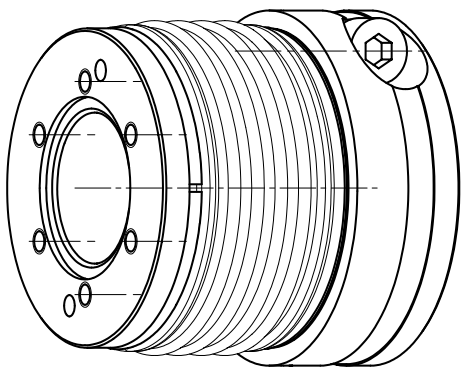


Massentraegheitsmoment ($J_{ges}$) der Kupplung (mit max. Bohrung) 392.72201 kgmm$^2$
mass moment of inertia ($J_{ges}$) of the coupling (with max. bore) 392.72201 kgmm$^2$

| | | | | | | | |
|---|---|---|---|---|---|---|---|
| Oberflaechenguete nach DIN EN ISO 1302 Reihe 2<br>Surface quality acc. to DIN EN ISO 1302 line 2 | | | | Schutzvermerk ISO 16016 beachten<br>Note protection mark acc. to ISO 16016 | | | |
| Allgemeintoleranzen nach<br>General tolerances acc. to | DIN ISO 2768 - mH | | | Massstab<br>Scale | 1:1 | Format<br>Size | A3 |
| TOOLFLEX 42<br>Design S-CF | | | | TOOLFLEX 42<br>Bauart S-CF | | | |
| | gezeichnet<br>drawn | Werkstoff<br>Material | . | Kz | Lfd.-Nr.<br>Current number | Index<br>Rev. | KTR |
| Datum<br>Date | 04.07.19 | Norm<br>Standard | | M | 638383 | 2 | |
| Name | KF | Gewicht<br>Weight | 0.578 kg | | | | |