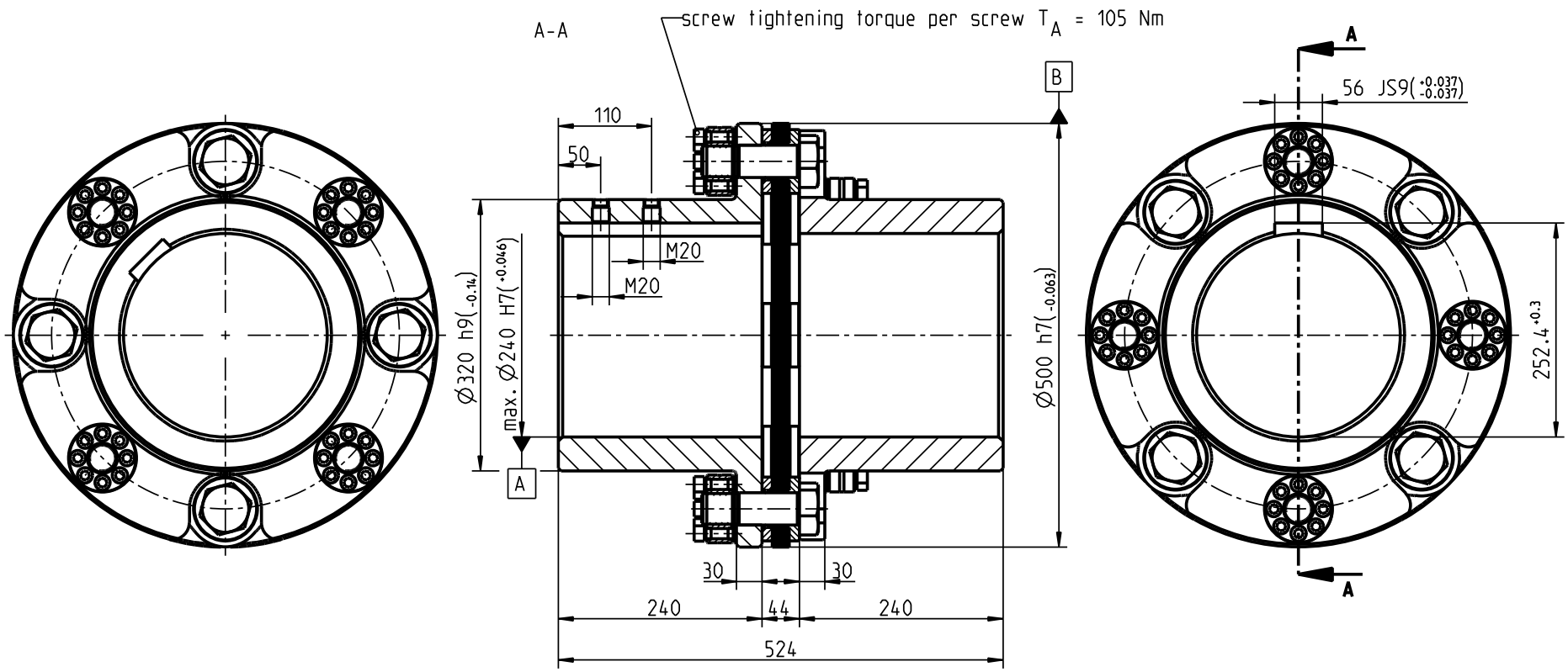


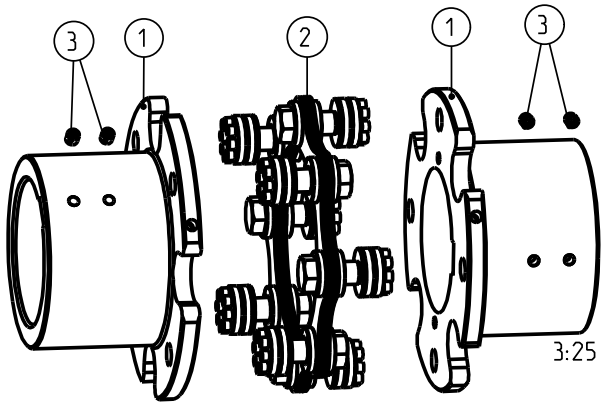


Technical data:
Nominal torque = 120.000 Nm
Maximum torque = 240.000 Nm
Alternate torque = 60.000 Nm

| | | | | | |
|---|---|---|---|---|---|
| Oberflaechenguete nach DIN ISO 1302 Reihe 2<br>Surface quality acc. to DIN ISO 1302 line 2 | | | Schutzvermerk ISO 16016 beachten<br>Note protection mark acc. to ISO 16016 | | |
| Allgemeintoleranzen nach DIN ISO 2768 - mH<br>General tolerances acc. to DIN ISO 2768 - mH | | | Masstab<br>Scale | 1:5 | Format DIN<br>Size A3 |
| **RADEX-N 248**<br>**NN** | | | KTR-Kupplungstechnik GmbH<br>D-48407 Rheine | | |
| | gezeichnet<br>drawn | Werkstoff<br>Material | . | Teilnummer<br>Part number | Kz | Lfd.-Nr.<br>Current number | Index<br>Change |
| Datum | 22.08.08 | DIN | | | M | 479003 | 0 |
| Name | KU | Gewicht<br>Weight | 206.384 | | | | |