ZVS-Viewer (c)2014

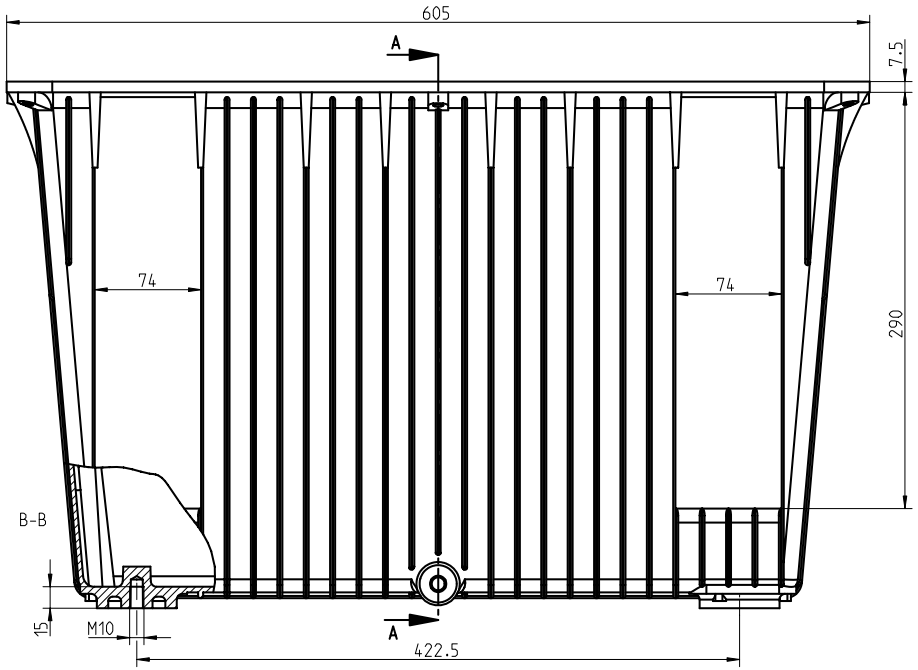

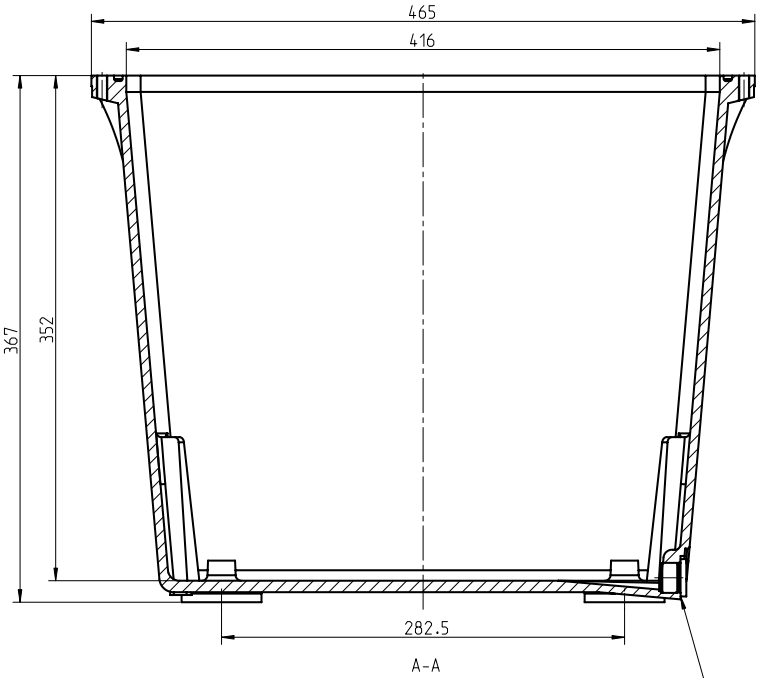

Behälter incl. Ablaßschraube G 1/2".
Tank including drain plug G 1/2".

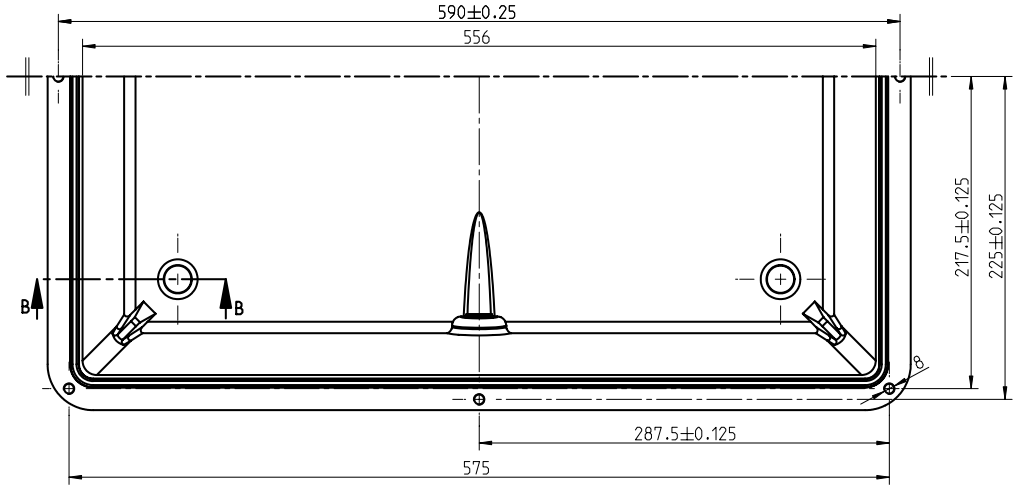

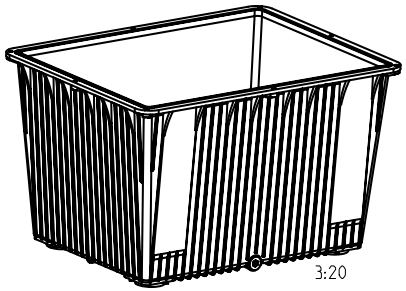

Oberflaechenguete nach DIN EN ISO 1302 Reihe 2 Surface quality acc. to DIN EN ISO 1302 line 2				Schutzvermerk ISO 16016 beachten Note protection mark acc. to ISO 16016			
Allgemeintoleranzen nach General tolerances acc. to				Massstab Scale	2:5	Format Size	A2
BAK Oil Tank 63 Customer Drawing				Oelbehaelter BAK 63 Massblatt			
	gezeichnet drawn	Werkstoff Material	GD-AlSi8Cu3	Kz	Lfd.-Nr. Current number	Index Rev.	KTR
	Datum Date	02.07.18	Norm Standard	DIN 1725	M	407498	3
	Name	RD	Gewicht Weight	11.382 kg			

NAME:REDDER OBJECT:407498 DATE:02-Jul-18 15:49:22