ZVS-Viewer (c)2014
NAME:N.SILIES OBJECT:382953 DATE:26-Jul-21 08:32:55

A-A

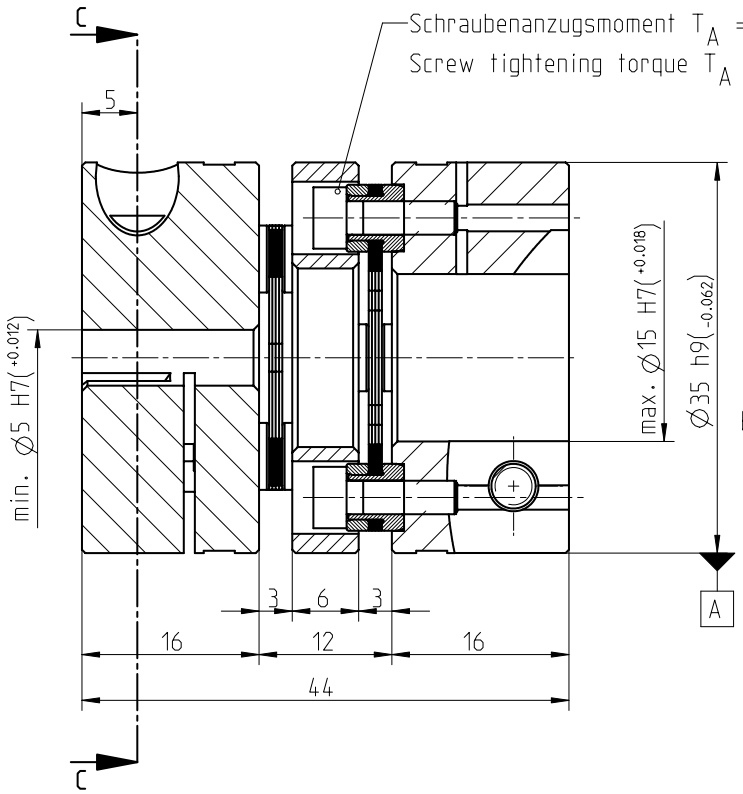

C-C

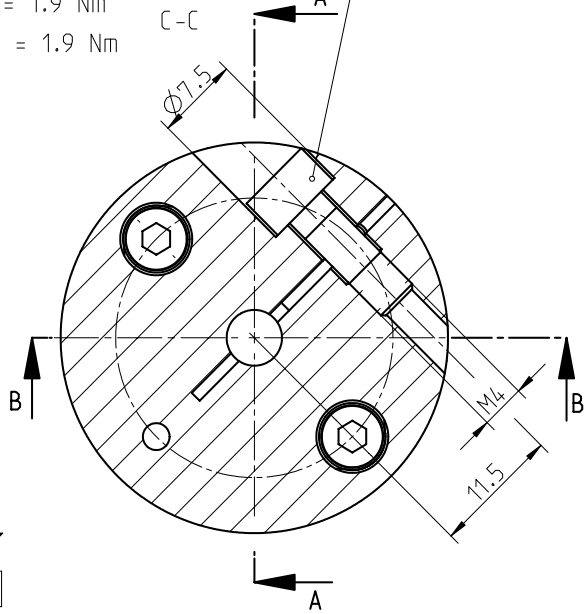

Schraubenanzugsmoment T_A = 3 Nm
Screw tightening torque T_A = 3 Nm

B-B

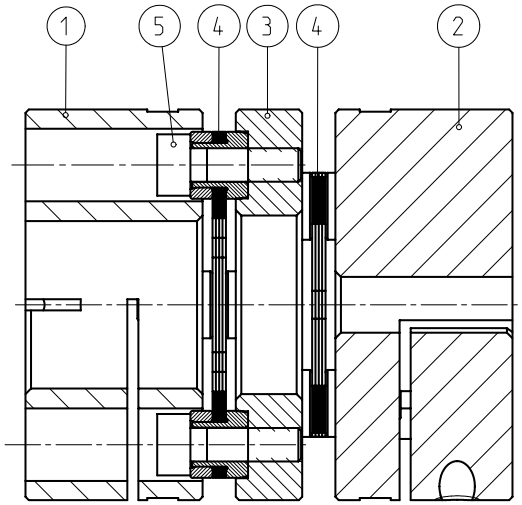

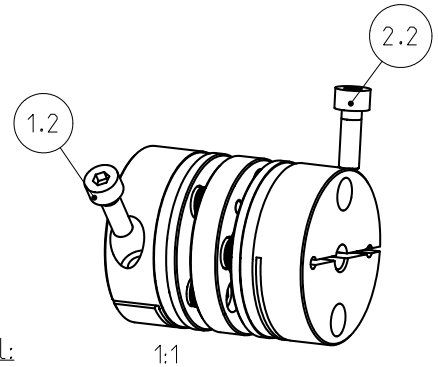

1:1

Werkstoff: / material:
Teil / part 1, 2 + 3 = Aluminium

Coupling data	
Nominal torque T_{KN}	7,5 Nm
Maximum torque T_{Kmax}	15 Nm
Friction torque Ø5H7	5 Nm
Friction torque Ø15H7	13.5 Nm
Moment of inertia	0,000016 kgm^2

Permissible misalignments		
Angular (each lamina)	Axial	Radial
1,0°	0,8 mm	0,16 mm
max. figures not occurs simultaneously		

Schutzvermerk ISO 16016 beachten
Note protection mark acc. to ISO 16016

Massstab Scale 11:5 Format Size A3

RADEX-NC 10
DK

RADEX-NC 10
DK

	gezeichnet drawn	Werkstoff Material		Kz	Lfd.-Nr. Current number	Index Rev.
Datum Date	26.07.21	Norm Standard		M	382953	6
Name	SIS	Gewicht Weight	0.097 kg			

KTR