ROTEX®

Torsionally flexible jaw couplings

No. 001 - shaft coupling,
No. 018 - DKM,
with taper clamping sleeve
and their combinations

according to directive 2014/34/EU
and UK directive SI 2016 No. 1107

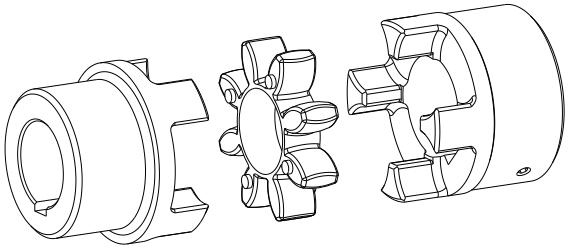

Type No. 001 - shaft coupling

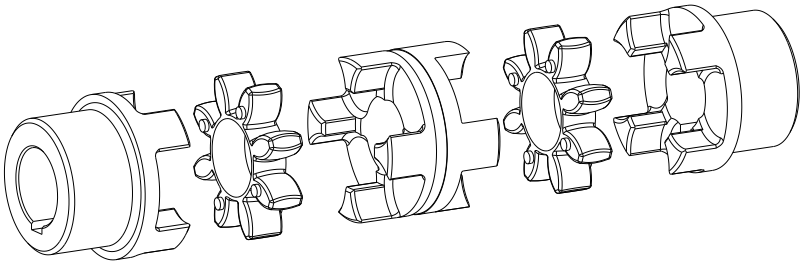

Type No. 018 - DKM
double-cardanic coupling

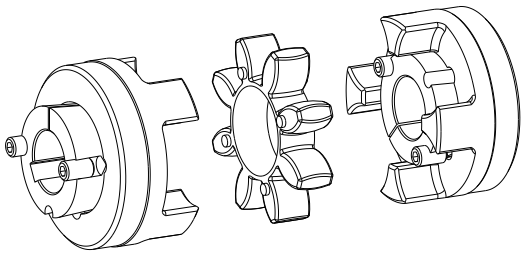

Type with taper clamping sleeve

ROTEX® is a torsionally flexible jaw coupling. It is able to compensate for shaft misalignment, for example caused by manufacturing inaccuracies, thermal expansion, etc.

Table of contents

1 Technical data 3

2 Advice 8

2.1 General advice 8
2.2 Safety and advice symbols 8
2.3 General hazard warnings 8
2.4 Intended use 9
2.5 Coupling selection 9
2.6 Reference to EC Machinery Directive 2006/42/EC 9

3 Storage, transport and packaging 10

3.1 Storage 10
3.2 Transport and packaging 10

4 Assembly 10

4.1 Components of the coupling 10
4.2 Advice for finish bore 12
4.3 Assembly of the coupling (general) 13
4.4 Assembly of standard type 14
4.5 Assembly of type DKM 15
4.6 Assembly/disassembly of type taper clamping sleeve 16
4.7 Displacements - alignment of the couplings 17

5 Start-up 19

6 Breakdowns, causes and elimination 20

7 Disposal 22

8 Maintenance and service 23

9 Spares inventory, customer service addresses 23

10 Enclosure A

Advice and instructions regarding the use in Ex potentially explosive atmospheres 24

10.1 Intended use in Ex potentially explosive atmospheres 25

10.2 Inspection intervals for couplings in Ex potentially explosive atmospheres 26
10.3 Standard values of wear 27

10.4 Ex marking of coupling for potentially explosive atmospheres 28
10.5 EU Certificate of conformity 30
10.6 UK Declaration of conformity 31

1 Technical data

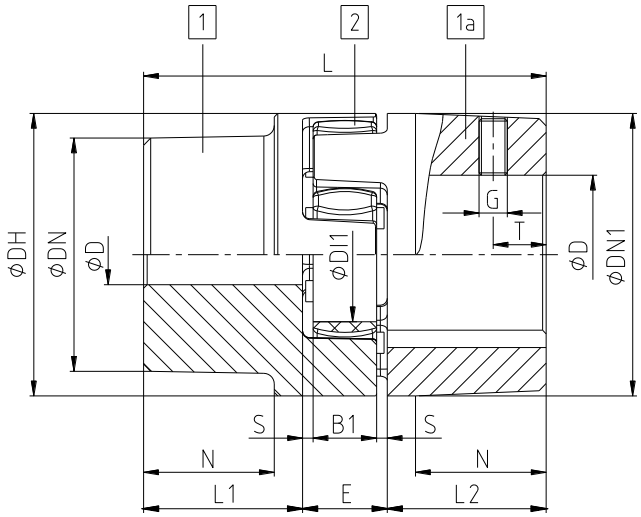

Illustration 1: ROTEX® (material: Sint, Al-D and Al-H)

Table 1: Material sintered steel (Sint)

Size	Compo-nent	Spider [1] (component 2) Rated torque [Nm]			Dimensions [mm] [3]									
					Finish bore [2] D (min-max)	General								
		92 ShA	98 ShA	64 ShD		L	L1, L2	E	B1	S	DH	DI1	DN1	N
14	1a	7.5	12.5	-	6 - 16	35	11	13	10	1.5	30	10	-	-
19	1a	10	17	-	6 - 24	66	25	16	12	2.0	40	18	-	-
24	1a	34	60	-	9 - 28	78	30	18	14	2.0	56	27	-	-

Table 2: Material aluminium diecast (Al-D) - no approval for ATEX

Size	Compo-nent	Spider [1] (component 2) Rated torque [Nm]			Dimensions [mm] [3]									
					Finish bore [2] D (min-max)	General								
		92 ShA	98 ShA	64 ShD		L	L1, L2	E	B1	S	DH	DI1	DN1	N
19	1	10	17	-	6 - 19	66	25	16	12	2.0	41	18	32	20
	1a				19 - 24								41	
24	1	35	60	-	9 - 24	78	30	18	14	2.0	56	27	40	24
	1a				22 - 28								56	
28	1	95	160	-	10 - 28	90	35	20	15	2.5	67	30	48	28
	1a				28 - 38								67	

Table 3: Material aluminium (Al-H)

Size	Compo-nent	Spider [1] (component 2) Rated torque [Nm]			Dimensions [mm] [3]									
					Finish bore [2] D (min-max)	General								
		92 ShA	98 ShA	64 ShD		L	L1, L2	E	B1	S	DH	DI1	DN1	N
5	1a	0.5	0.9	-	0 - 6	15	5	5	4	0.5	10	-	-	-
7	1a	1.2	2.0	2.4	0 - 7	22	7	8	6	1.0	14	-	-	-
9	1a	3.0	5.0	6.0	0 - 11	30	10	10	8	1.0	20	7.2	-	-
12	1a	5.0	9.0	12	0 - 12	34	11	12	10	1.0	25	8.5	-	-
14	1a	7.5	12.5	16	0 - 16	35	11	13	10	1.5	30	10.5	-	-
19	1a	10	17	26	0 - 24	66	25	16	12	2.0	40	18	-	-
24	1a	35	60	75	0 - 28	78	30	18	14	2.0	55	27	-	-
28	1a	95	160	200	0 - 38	90	35	20	15	2.5	65	30	-	-
38	1a	190	325	405	0 - 45	114	45	24	18	3.0	80	38	-	-
42	1a	265	450	560	0 - 55	126	50	26	20	3.0	95	46	-	-
48	1a	310	525	655	0 - 62	140	56	28	21	3.0	105	51	-	-

1) Maximum torque of coupling $T_{K\,max.}$ = rated torque of coupling T_{KN} x 2
2) Bores H7 with keyway to DIN 6885 sheet 1 [JS9] and setscrew
3) For dimensions G and T see table 8; there is a setscrew on the keyway (only with Al-D opposite the keyway)

1 Technical data

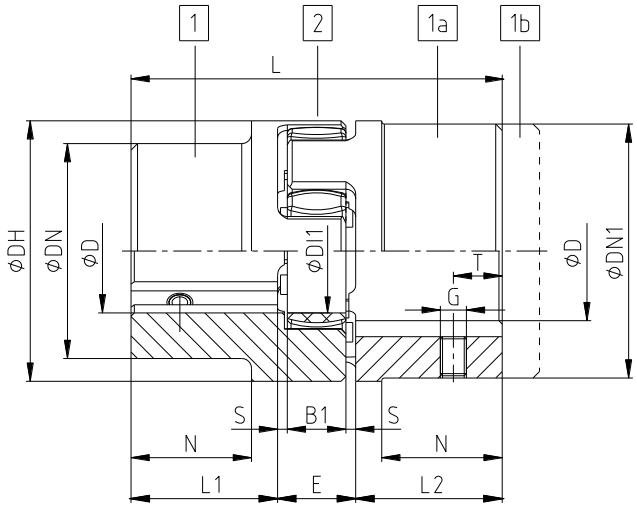

Illustration 2: ROTEX® (material: GJL/GJS)

Table 4: Material cast iron (GJL)/nodular iron (GJS)

Size	Compo-nent	Spider [1] (component 2) Rated torque [Nm]			Dimensions [mm] [3]									
					Finish bore [2]	General								
		92 ShA	98 ShA	64 ShD	D (min-max)	L	L1, L2	E	B1	S	DH	DI1	DN, DN1	N
Cast iron (GJL)														
38	1	190	325	405	12 - 40	114	45	24	18	3.0	80	38	66	37
	1a				38 - 48								78	
	1b				12 - 48	164	70							62
42	1	265	450	560	14 - 45	126	50	26	20	3.0	95	46	75	40
	1a				42 - 55								94	
	1b				14 - 55	176	75							65
48	1	310	525	655	15 - 52	140	56	28	21	3.5	105	51	85	45
	1a				48 - 62								104	
	1b				15 - 62	188	80							69
55	1	410	685	825	20 - 60	160	65	30	22	4.0	120	60	98	52
	1a				55 - 74								118	
65	1	625	940	1175	22 - 70	185	75	35	26	4.5	135	68	115	61
75	1	1280	1920	2400	30 - 80	210	85	40	30	5.0	160	80	135	69
90	1	2400	3600	4500	40 - 97	245	100	45	34	5.5	200	100	160	81
Nodular iron (GJS)														
100	1	3300	4950	6185	50 - 115	270	110	50	38	6.0	225	113	180	89
110	1	4800	7200	9000	60 - 125	295	120	55	42	6.5	255	127	200	96
125	1	6650	10000	12500	60 - 145	340	140	60	46	7.0	290	147	230	112
140	1	8550	12800	16000	60 - 160	375	155	65	50	7.5	320	165	255	124
160	1	12800	19200	24000	80 - 185	425	175	75	57	9.0	370	190	290	140
180	1	18650	28000	35000	85 - 200	475	185	85	64	10.5	420	220	325	156

1) Maximum torque of coupling $T_{K\,max.}$ = rated torque of coupling T_{KN} x 2
2) Bores H7 with keyway to DIN 6885 sheet 1 [JS9] and setscrew
3) For dimensions G and T see table 8; there is a setscrew on the keyway

1 Technical data

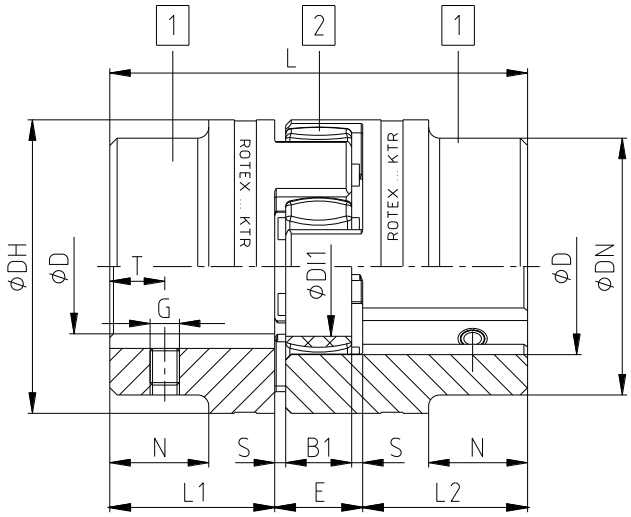

Illustration 3: ROTEX® (material: steel)

Table 5: Material steel

Size	Component	Spider 1) (component 2) Rated torque [Nm]			Dimensions [mm] 3)									
					Finish bore 2) D (min-max)	General								
		92 ShA	98 ShA	64 ShD		L	L1, L2	E	B1	S	DH	DI1	DN1	N
14	1a	7.5	12.5	16	0 - 16	35	11	13	10	1.5	30	10	30	-
	1b					50	18.5							
19	1a	10	17	21	0 - 25	66	25	16	12	2.0	40	18	40	-
	1b					90	37							
24	1a	35	60	75	0 - 35	78	30	18	14	2.0	55	27	55	-
	1b					118	50							
28	1a	95	160	200	0 - 40	90	35	20	15	2.5	65	30	65	-
	1b					140	60							
38	1	190	325	405	0 - 48	114	45	24	18	3.0	80	38	70	27
	1b					164	70						80	-
42	1	265	450	560	0 - 55	126	50	26	20	3.0	95	46	85	28
	1b					176	75						95	-
48	1	310	525	655	0 - 62	140	56	28	21	3.5	105	51	95	32
	1b					188	80						105	-
55	1	410	685	825	0 - 75	160	65	30	22	4.0	120	60	110	37
	1b					210	90						120	-
65	1	625	940	1175	0 - 80	185	75	35	26	4.5	135	68	115	47
	1b					235	100						135	-
75	1	1280	1920	2400	0 - 95	210	85	40	30	5.0	160	80	135	53
	1b					260	110						160	-
90	1	2400	3600	4500	0 - 110	245	100	45	34	5.5	200	100	160	62
	1b					295	125						200	-
100	1	3300	4950	6185	0 - 115	270	110	50	38	6.0	225	113	180	89
110	1	4800	7200	9000	0 - 125	295	120	55	42	6.5	255	127	200	96
125	1	6650	10000	12500	60 - 145	340	140	60	46	7.0	290	147	230	112
140	1	8550	12800	16000	60 - 160	375	155	65	50	7.5	320	165	255	124
160	1	12800	19200	24000	80 - 185	425	175	75	57	9.0	370	190	290	140
180	1	18650	28000	35000	85 - 200	475	195	85	64	10.5	420	220	325	156

1) Maximum torque of coupling $T_{K\,max.}$ = rated torque of coupling T_{KN} x 2
2) Bores H7 with keyway to DIN 6885 sheet 1 [JS9] and setscrew
3) For dimensions G and T see table 8; there is a setscrew on the keyway

1 Technical data

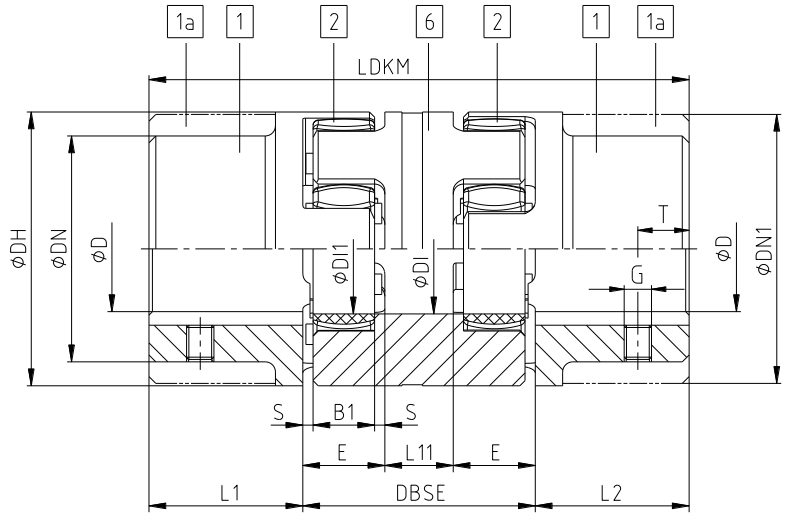

Illustration 4: ROTEX® type DKM

Table 6: Type DKM

Size	Spider [1] (component 2) Rated torque [Nm]		Dimensions [mm] [3]									
			Dimensions D [2], DN, DN1	General								
	92 ShA	98 ShA		LDKM	L1, L2	E	B1	S	DH	DI, DI1	L11	DBSE
19	10	17	see table 1 to 5	92	25	16	12	2.0	40	18	10	42
24	35	60		112	30	18	14	2.0	55	27	16	52
28	95	160		128	35	20	15	2.5	65	30	18	58
38	190	325		158	45	24	18	3.0	80	38	20	68
42	265	450		174	50	26	20	3.0	95	46	22	74
48	310	525		192	56	28	21	3.5	105	51	24	80
55	410	685		218	65	30	22	4.0	120	60	28	88
65	625	940		252	75	35	26	4.5	135	68	32	102
75	1280	1920		286	85	40	30	5.0	160	80	36	116
90	2400	3600		330	100	45	34	5.5	200	100	40	130

1) Maximum torque of coupling $T_{K\,max.}$ = rated torque of coupling T_{KN} x 2
2) Bores H7 with keyway to DIN 6885 sheet 1 [JS9] and setscrew
3) For dimensions G and T see table 8; there is a setscrew on the keyway (only with Al-D opposite the keyway)

1 Technical data

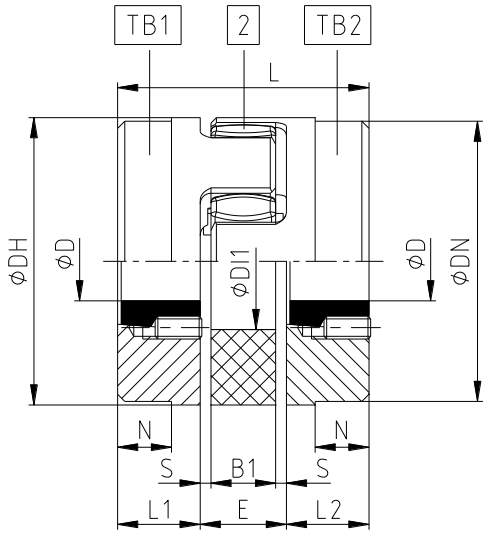

Illustration 5: ROTEX® type with taper clamping sleeve

Coupling design:

TB1 Screw connection on cam side
TB2 Screw connection on collar side

Various combinations of types TB1 and TB2 are available.

Table 7: Type with taper clamping sleeve

Size	Compo-nent	Spider [1] (component 2) Rated torque [Nm]		Dimensions [mm]										Taper clamping sleeve
				Finish bore D (min-max)	General									
		92 ShA	98 ShA		L	L1, L2	E	B1	S	DH	DI1	DN	N	
24	1a	35	60	10 - 25	64	22	18	14	2.0	55	27	-	-	1008
28	1a	95	160	10 - 25	66	23	20	15	2.5	65	30	-	-	1108
38	1a	190	325	10 - 25	70	23	24	18	3.0	80	38	78	15	1108
42	1a	265	450	14 - 25	78	26	26	20	3.0	95	46	94	16	1610
48	1a	310	525	14 - 40	106	39	28	21	3.5	105	51	104	28	1615
55	1a	410	685	14 - 50	96	33	30	22	4.0	120	60	118	20	2012
65	1	625	940	14 - 50	101	33	35	26	4.5	135	68	115	5	2012
75	1	1280	1920	16 - 60	144	52	40	30	5.0	160	80	158	36	2517
				25 - 75										3020 [2]
90	1	2400	3600	25 - 75	149	52	45	34	5.5	200	100	160	14	3020
100	1	3300	4950	35 - 90	230	90	50	38	6.0	225	113	180	69	3535
125	1	6650	10000	55 - 110	288	114	60	46	7.0	290	147	230	86	4545

1) Maximum torque of coupling $T_{K\,max.}$ = rated torque of coupling T_{KN} x 2
2) Available for type TB2 only

ROTEX® couplings with attachments that can generate heat, sparks and static charging (e. g. combinations with brake drums, brake disks, overload systems such as torque limiters, fan impellers etc.) are <u>not</u> permitted for the use in potentially explosive atmospheres.
A separate analysis must be performed.

2 Advice

2.1 General advice

Please read through these operating/assembly instructions carefully before you start up the coupling.
Pay special attention to the safety instructions!

The **ROTEX®** coupling is suitable and approved for the use in potentially explosive atmospheres. When using the coupling in potentially explosive atmospheres, observe the special advice and instructions regarding safety in enclosure A.

The operating/assembly instructions are part of your product. Please store them carefully and close to the coupling. The copyright for these operating/assembly instructions remains with KTR.

2.2 Safety and advice symbols

Warning of potentially explosive atmospheres	This symbol indicates notes which may contribute to preventing bodily injuries or serious bodily injuries that may result in death caused by explosion.
Warning of personal injury	This symbol indicates notes which may contribute to preventing bodily injuries or serious bodily injuries that may result in death.
Warning of product damages	This symbol indicates notes which may contribute to preventing material or machine damage.
General advice	This symbol indicates notes which may contribute to preventing adverse results or conditions.
Warning of hot surfaces	This symbol indicates notes which may contribute to preventing burns with hot surfaces resulting in light to serious bodily injuries.

2.3 General hazard warnings

With assembly, operation and maintenance of the coupling it has to be made sure that the entire drive train is secured against accidental switch-on. You may be seriously hurt by rotating parts. Make absolutely sure to read through and observe the following safety indications.

- All operations on and with the coupling have to be performed taking into account "safety first".
- Make sure to switch off the power pack before you perform your work on the coupling.
- Secure the power pack against accidental switch-on, e. g. by providing warning signs at the place of switch-on or removing the fuse for current supply.
- Do not reach into the operating area of the coupling as long as it is in operation.
- Secure the coupling against accidental contact. Provide for the necessary protection devices and covers.

2 Advice

2.4 Intended use

You may only assemble, operate and maintain the coupling if you

- have carefully read through the operating/assembly instructions and understood them
- are technically qualified and specifically trained (e. g. safety, environment, logistics)
- are authorized by your company

The coupling may only be used in accordance with the technical data (see chapter 1). Unauthorized modifications on the coupling design are not admissible. We will not assume liability for any damage that may arise. In the interest of further development we reserve the right for technical modifications.
The **ROTEX®** described in here corresponds to the state of the art at the time of printing of these operating/assembly instructions.

2.5 Coupling selection

For a permanent and failure-free operation of the coupling it must be selected according to the selection instructions (according to DIN 740 part 2) for the particular application (see catalogue drive technology "ROTEX®").
If the operating conditions (performance, speed, modifications on engine and machine) change, the coupling selection must be reviewed.
Make sure that the technical data regarding torque refer to the spider only. The transmittable torque of the shaft-hub-connection must be reviewed by the customer and is subject to his responsibility.

For drives subject to torsional vibrations (drives with cyclic stress due to torsional vibrations) it is necessary to perform a torsional vibration calculation to ensure a reliable selection. Typical drives subject to torsional vibrations are e. g. drives with diesel engines, piston pumps, piston compressors etc. If requested, KTR will perform the coupling selection and the torsional vibration calculation.

2.6 Reference to EC Machinery Directive 2006/42/EC

The couplings supplied by KTR should be considered as components, not machines or partly completed machines according to EC Machinery Directive 2006/42/EC. Consequently KTR does not have to issue a declaration of incorporation. For details about safe assembly, start-up and safe operation refer to the present operating/assembly instructions considering the warnings.

3 Storage, transport and packaging

3.1 Storage

The coupling hubs are supplied in preserved condition and can be stored in a dry and roofed place for 6 - 9 months.
The features of the coupling spiders (elastomers) remain unchanged for up to 5 years with favourable storage conditions.

The storage rooms must not include any ozone-generating devices like e. g. fluorescent light sources, mercury-vapour lamps or electrical high-voltage appliances.
Humid storage rooms are not suitable.
Make sure that condensation is not generated. The best relative air humidity is less than 65 %.

3.2 Transport and packaging

In order to avoid any injuries and any kind of damage always make use of proper transport and lifting equipment.

The couplings are packed differently each depending on size, number and kind of transport. Unless otherwise contractually agreed, packaging will follow the in-house packaging specifications of KTR.

4 Assembly

The coupling is generally supplied in individual parts. Before assembly the coupling has to be inspected for completeness.

4.1 Components of the coupling

Components of ROTEX®, shaft coupling type No. 001

Component	Quantity	Description
1	2	Hub
2	1	Spider
3	2	Setscrew DIN EN ISO 4029

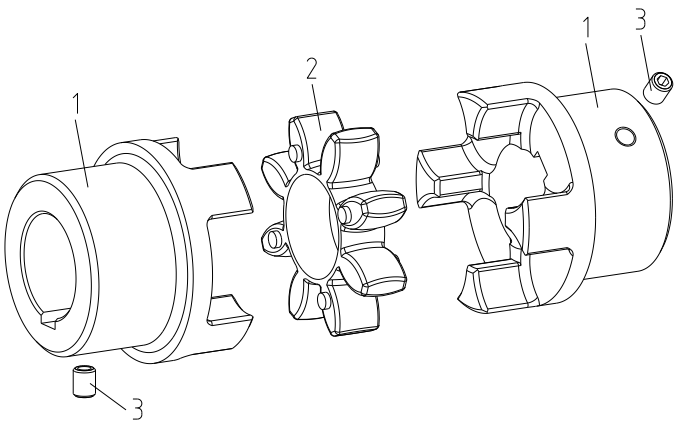

Illustration 6: ROTEX®

4 Assembly

4.1 Components of the coupling

Components of ROTEX® type DKM

Component	Quantity	Description
1	2	Hub
2	2	Spider
4	1	DKM spacer
4	2	Setscrew DIN EN ISO 4029

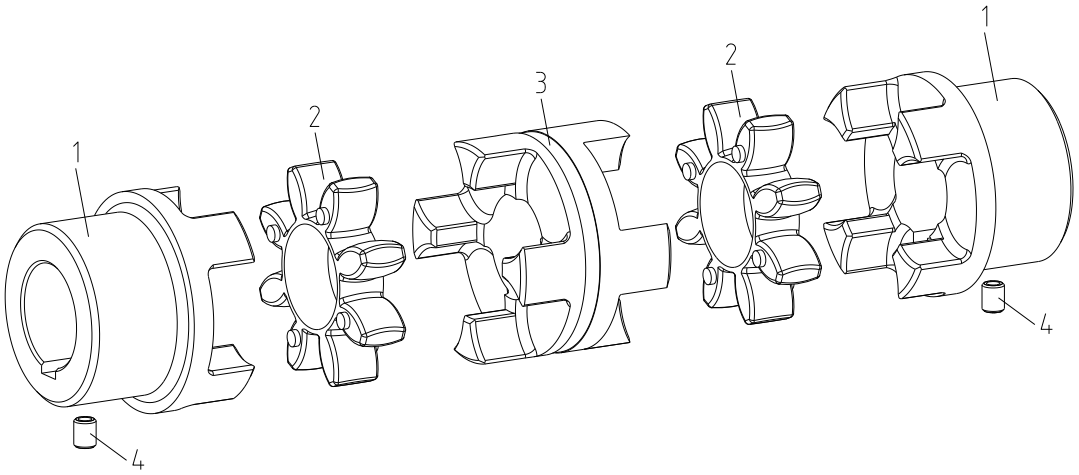

Illustration 7: ROTEX® type DKM

Components of ROTEX® type with taper clamping sleeve

Component	Quantity	Description
TB1/TB2	2	Hub for taper clamping sleeve
1	2	Taper clamping sleeve
2	1	Spider
3	4	Setscrew DIN EN ISO 4029

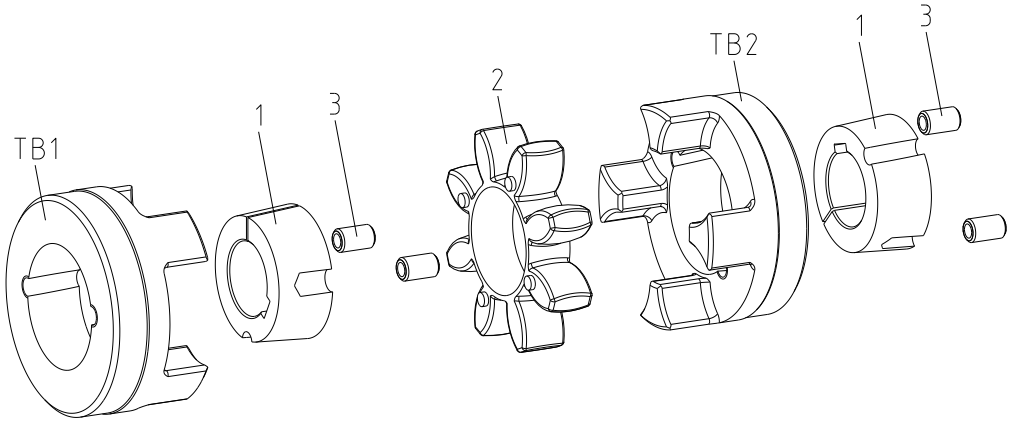

Illustration 8: ROTEX® type with taper clamping sleeve

4 Assembly

4.1 Components of the coupling

Features of standard spiders

Spider hardness (Shore)	92 Shore A		98 Shore A		64 Shore D	
	T-PUR® (orange)	PUR (yellow)	T-PUR® (purple)	PUR (red)	T-PUR® (light green)	PUR (natural white [1])
Marking (colour)						

1) Natural white with green marking of teeth

4.2 Advice for finish bore

STOP

The maximum permissible bore diameters D (see chapter 1 - technical data) must not be exceeded. If these figures are disregarded, the coupling may tear. Rotating particles may cause danger to life.

- Hub bores machined by the customer have to observe concentricity resp. axial runout (see illustration 9).
- Make absolutely sure to observe the figures for ØD.
- Carefully align the hubs when the finish bores are drilled.
- Provide for a setscrew according to DIN EN ISO 4029 with a cup point or an end plate to fasten the hubs axially.

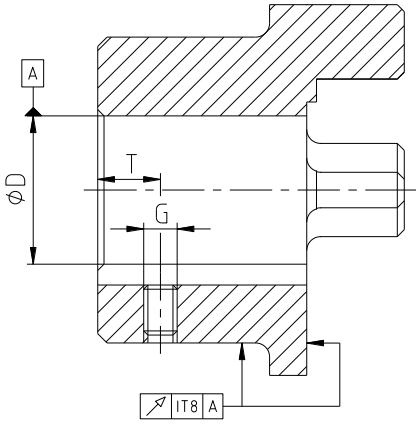

Illustration 9: Concentricity and axial runout

The customer bears the sole responsibility for all machining processes performed subsequently on unbored or pilot bored as well as finish machined coupling components and spare parts. KTR does not assume any warranty claims resulting from insufficient remachining.

KTR supplies unbored or pilot bored coupling components and spare parts only upon explicit request of the customer. These parts are additionally marked with the symbol Ⓤ.

<u>Reference to unbored resp. pilot bored coupling components with explosion protection marking:</u>
Basically the company KTR Systems GmbH supplies couplings resp. coupling hubs with explosion protection marking as an unbored or pilot bored type only on explicit request of the customer. The prerequisite is a declaration of exemption submitted by the customer assuming any responsibility and liability for respective remachining performed on the product of KTR Systems GmbH.

4 Assembly

4.2 Advice for finish bore

Table 8: Setscrew DIN EN ISO 4029

Size	14	19	24	28	38	42	48	55	65	75	90	100	110	125	140	160	180
Dimension G	M4	M5	M5	M8	M8	M8	M8	M10	M10	M10	M12	M12	M16	M16	M20	M20	M20
Dimension T	5	10	10	15	15	20	20	20	20	25	30	30	35	40	45	50	50
Tightening torque T_A [Nm]	1.5	2	2	10	10	10	10	17	17	17	40	40	80	80	140	140	140

Table 9: Recommended fit pairs acc. to DIN 748/1

Bore [mm]		Shaft tolerance	Bore tolerance
above	up to		
	50	k6	H7 (KTR standard)
50		m6	

If a feather keyway is intended to be used in the hub, it should correspond to the tolerance ISO JS9 (KTR standard) with standard operating conditions or ISO P9 with sophisticated operating conditions (frequently alternating torsional direction, shock loads, etc.). The keyway should preferably be located between the cams. With axial fastening via setscrew the tapped hole should be positioned on the keyway except for Al-D which should be positioned opposite the keyway.

The transmittable torque of the shaft-hub-connection must be reviewed by the customer and is subject to his responsibility.

4.3 Assembly of the coupling (general)

We recommend to inspect bores, shaft, keyway and feather key for dimensional accuracy before assembly.

Heating the hubs lightly (approx. 80 °C) allows for an easier mounting on the shaft.

Pay attention to the ignition risk in potentially explosive atmospheres!

Touching the heated hubs causes burns.
Please wear safety gloves.

With the assembly make sure that the distance dimension E (see table 1 to 7) is observed to allow for axial clearance of the spider when in operation.
Disregarding this advice may cause damage to the coupling.

If used in potentially explosive atmospheres the setscrews to fasten the hubs as well as all screw connections must be secured against working loose additionally, e. g. conglutinating with Loctite (average strength).

4 Assembly

4.4 Assembly of standard type

- Mount the hubs on the shaft of driving and driven side (see illustration 10).
- The internal sides of the hubs must be flush with the front sides of the shafts.

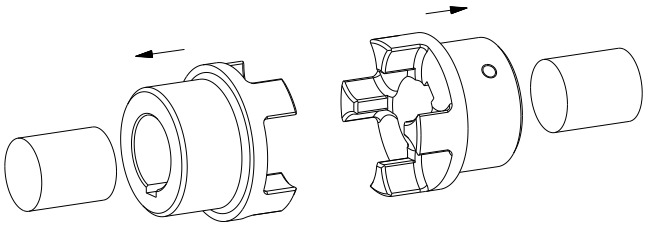

Illustration 10: Assembly of hubs

- Insert the spider in the cam section of the hubs on the driving or driven side (see illustration 11).

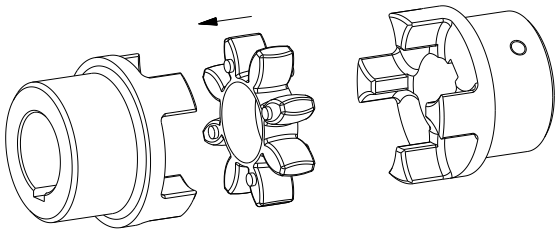

Illustration 11: Assembly of spider

- Shift the power packs in axial direction until the distance dimension E is achieved (see illustration 12).
- If the power packs are already firmly assembled, shifting the hubs axially on the shafts allows for setting the distance dimension E.
- Fasten the hubs by tightening the setscrews DIN EN ISO 4029 with a cup point (tightening torque see table 8).
- Centre the spider between the hubs and check the dimensions E and S (see illustration 12 and chapter 1).

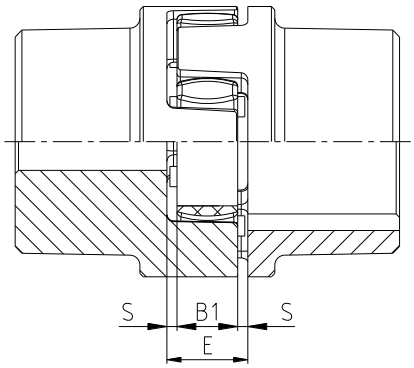

Illustration 12: Assembly of coupling

☞ **If the shaft diameters with inserted feather key are smaller than dimension Dl1 (see table 1 to 7) of the spider, one or two shaft ends may protrude into the spider.**

⚠ **Having started up the coupling, the wear of spider has to be inspected at regular maintenance intervals and the spider has to be replaced, if necessary.**

4 Assembly

4.5 Assembly of type DKM

- Mount the hubs on the shaft of driving and driven side (see illustration 13).
- The internal sides of the hubs must be flush with the front sides of the shafts.

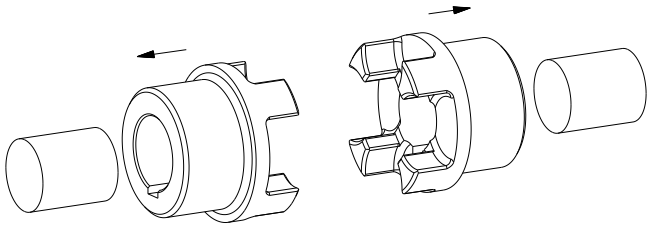

Illustration 13: Assembly of hubs

- Insert the spiders in the cam section of the hubs (see illustration 14).

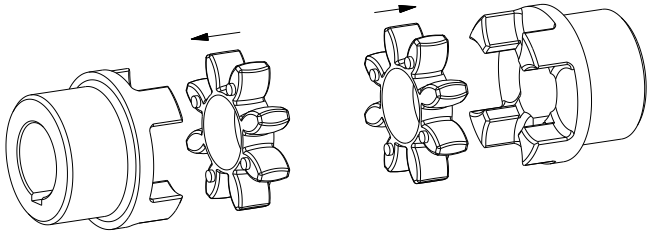

Illustration 14: Assembly of spiders

- Insert the DKM spacer in the spider of the driving or driven side hub (see illustration 15).

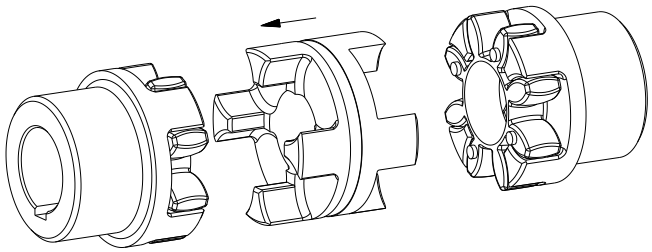

Illustration 15: Assembly of the DKM spacer

- Shift the power packs in axial direction until the distance dimension E or DBSE is achieved (see illustration 16).
- If the power packs are already firmly assembled, shifting the hubs axially on the shafts allows for setting the distance dimension DBSE.
- Fasten the hubs by tightening the setscrews DIN EN ISO 4029 with a cup point (tightening torque see table 8).
- Centre the spider between the hubs and check the dimensions E and DBSE (see illustration 16 and chapter 1).

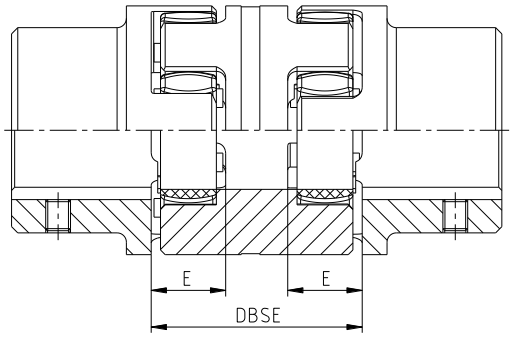

Illustration 16: Assembly of coupling

☞ **If the shaft diameters with inserted feather key are smaller than dimension Dl1 (see table 1 to 7) of the spider, one or two shaft ends may protrude into the spider.**

⚠ **Having started up the coupling, the wear of spider has to be inspected at regular maintenance intervals and the spider has to be replaced, if necessary.**

4 Assembly

4.6 Assembly/disassembly of type taper clamping sleeve

Assembly of taper clamping sleeve:

Clean the contact surfaces of the taper clamping sleeves and of shaft and hub and afterwards apply thin oil lightly (e. g. Ballistol Universal oil or Klüber Quietsch-Ex).
The taper clamping sleeves have axially parallel, cylindrical and smooth tapped blind holes. Only half of these holes are located in the material of the sleeve. The other half located in the hub has got threads.
Fit the coupling element and the taper clamping sleeve into each other, make sure that the bores cover each other and tighten the setscrews lightly. Fit the coupling element along with the taper clamping sleeve on the shaft and tighten the setscrews at the tightening torque specified in table 10.
During the screwing process the hub is mounted on the taper sleeve and thus the sleeve is pressed on the shaft. By light blows of the hammer the taper clamping sleeve must be pushed further into the taper bore by means of a suitable sleeve. Afterwards re-tighten the setscrews at the tightening torque specified in table 10. This process must be performed at least once.
Having operated the drive under load for a short while inspect if the setscrews are released.
Axial fixing of the Taper Lock hub (coupling hub with taper clamping sleeve) is obtained by proper assembly only.

If used in potentially explosive atmospheres the setscrews to fasten the taper clamping sleeves have to be secured against working loose additionally, e. g. conglutinating with Loctite (average strength).

Taper clamping sleeves used without a feather key are not permitted in potentially explosive atmospheres and are thus not provided with a relevant explosion protection marking.

Oils and greases with molybdenum disulphide or high-pressure additives, additives of Teflon and silicone as well as internal lubricants reducing the coefficient of friction significantly must not be used.

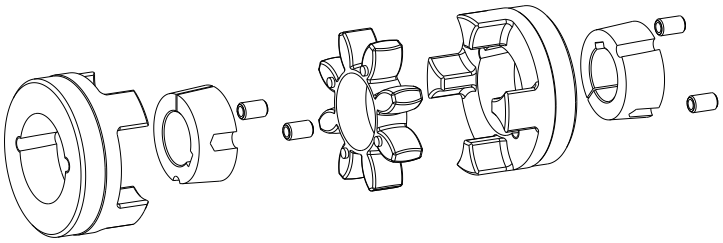

Illustration 17: ROTEX® type with taper clamping sleeve

Disassembly of taper clamping sleeve:

The taper clamping sleeve is released by removing the setscrews. Afterwards one of the setscrews used as forcing screw is screwed in the thread of the sleeve and tightened.
The coupling hub released that way can be manually pulled off the shaft with the taper clamping sleeve.

Table 10:

Taper clamping sleeve	Screw dimensions				Number
	G [inch]	L [inch]	SW [mm]	T_A [Nm]	
1008	1/4	1/2	3	5.7	2
1108	1/4	1/2	3	5.7	2
1610	3/8	5/8	5	20	2
1615	3/8	5/8	5	20	2
2012	7/16	7/8	6	31	2
2517	1/2	7/8	6	49	2
3020	5/8	1 1/4	8	92	2
3535	1/2	1 1/2	10	115	3
4545	3/4	1 3/4	12	170	3

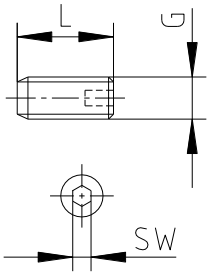

Illustration 18: Withworth setscrew (BSW)

4 Assembly

4.7 Displacements - alignment of the couplings

The displacement figures specified in table 11 to 13 provide for sufficient safety to compensate for external influences like, for example, heat expansion or foundation settling.

In order to ensure a long service life of the coupling and avoid hazards with the use in potentially explosive atmospheres, the shaft ends must be accurately aligned.
Please absolutely observe the displacement figures specified (see table 11 to 13).
If the figures are exceeded, the coupling will be damaged.
The more accurate the alignment of the coupling, the longer is its service life.
If used in potentially explosive atmospheres for explosion group IIC, only half of the displacement figures (see table 11 to 13) are permissible.

Please note:

- The displacement figures specified in table 11 to 13 are maximum figures which must not arise in parallel. If radial and angular displacements arise simultaneously, the permissible displacement figures may only be used proportionally (see illustration 20).
- Inspect with a dial gauge, ruler or feeler whether the permissible displacement figures of tables 11 to 13 can be observed.

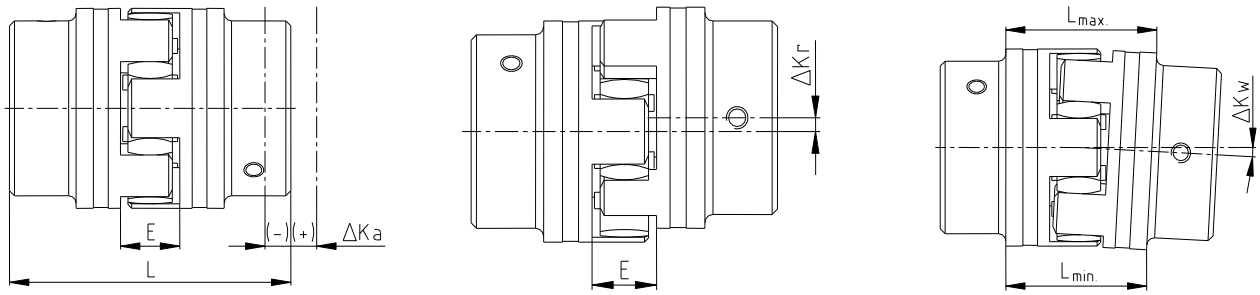

Axial displacements | Radial displacements | Angular displacements

$L_{max} = L + \Delta K_a$ [mm]

$\Delta K_w = L_{1max.} - L_{1min.}$ [mm]

Illustration 19: Displacements

Examples of the displacement combinations specified in illustration 20:

Example 1:
$\Delta K_r = 30$ %
$\Delta K_w = 70$ %

Example 2:
$\Delta K_r = 60$ %
$\Delta K_w = 40$ %

$\Delta K_{total} = \Delta K_r + \Delta K_w \leq 100$ %

Illustration 20: Combinations of displacement

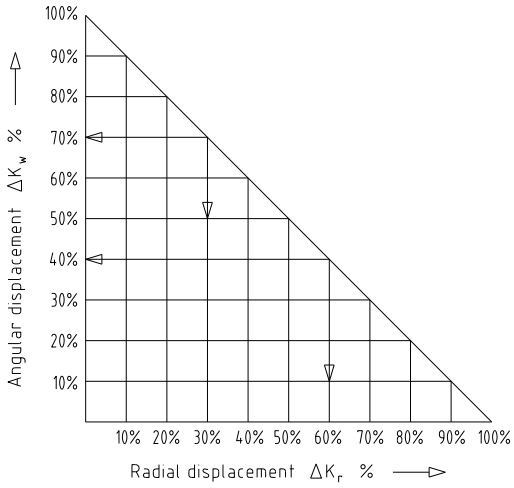

4 Assembly

4.7 Displacements - alignment of the couplings

Table 11: Displacement figures for 92 and 98 Shore A

Size		14	19	24	28	38	42	48	55	65	75	90	100	110	125	140	160	180
Max. axial displacement ΔK_a [mm]		-0.5	-0.5	-0.5	-0.7	-0.7	-1.0	-1.0	-1.0	-1.0	-1.5	-1.5	-1.5	-2.0	-2.0	-2.0	-2.5	-3.0
		+1.0	+1.2	+1.4	+1.5	+1.8	+2.0	+2.1	+2.2	+2.6	+3.0	+3.4	+3.8	+4.2	+4.6	+5.0	+5.7	+6.4
Max. radial displacement ΔK_r [mm] with n=	1500 rpm	0.17	0.20	0.22	0.25	0.28	0.32	0.36	0.38	0.42	0.48	0.50	0.52	0.55	0.60	0.62	0.64	0.68
	3000 rpm	0.11	0.13	0.15	0.17	0.19	0.21	0.25	0.26	0.28	0.32	0.34	0.36	0.38	-	-	-	-
Max. angular displacement ΔK_w with n=1500 rpm	[degree]	1.2	1.2	0.9	0.9	1.0	1.0	1.1	1.1	1.2	1.2	1.2	1.2	1.3	1.3	1.2	1.2	1.2
	[mm]	0.67	0.82	0.85	1.05	1.35	1.70	2.00	2.30	2.70	3.30	4.30	4.80	5.60	6.50	6.60	7.60	9.00
Max. angular displacement ΔK_w with n=3000 rpm	[degree]	1.1	1.1	0.8	0.8	0.9	0.9	1.0	1.0	1.1	1.1	1.1	1.1	1.2	-	-	-	-
	[mm]	0.60	0.70	0.75	0.85	1.10	1.40	1.60	2.00	2.30	2.90	3.80	4.20	5.00	-	-	-	-

Table 12: Displacement figures for 64 Shore D

Size		14	19	24	28	38	42	48	55	65	75	90	100	110	125	140	160	180
Max. axial displacement ΔK_a [mm]		-0.5	-0.5	-0.5	-0.7	-0.7	-1.0	-1.0	-1.0	-1.0	-1.5	-1.5	-1.5	-2.0	-2.0	-2.0	-2.5	-3.0
		+1.0	+1.2	+1.4	+1.5	+1.8	+2.0	+2.1	+2.2	+2.6	+3.0	+3.4	+3.8	+4.2	+4.6	+5.0	+5.7	+6.4
Max. radial displacement ΔK_r [mm] with n=	1500 rpm	0.11	0.13	0.15	0.18	0.21	0.23	0.25	0.27	0.30	0.34	0.36	0.37	0.40	0.43	0.45	0.46	0.49
	3000 rpm	0.08	0.09	0.10	0.13	0.15	0.16	0.18	0.19	0.21	0.24	0.25	0.26	0.28	-	-	-	-
Max. angular displacement ΔK_w with n=1500 rpm	[degree]	1.1	1.1	0.8	0.8	0.9	0.9	1.0	1.0	1.1	1.1	1.1	1.1	1.2	1.2	1.1	1.1	1.1
	[mm]	0.57	0.77	0.77	0.90	1.25	1.40	1.80	2.00	2.50	3.00	3.80	4.30	5.30	6.00	6.10	7.10	8.00
Max. angular displacement ΔK_w with n=3000 rpm	[degree]	1.0	1.0	0.7	0.7	0.8	0.8	0.9	0.9	1.0	1.0	1.0	1.0	1.1	-	-	-	-
	[mm]	0.52	0.70	0.67	0.80	1.00	1.30	1.60	1.80	2.20	2.70	3.50	4.00	4.90	-	-	-	-

Table 13: Displacement figures for type DKM only

Size		19	24	28	38	42	48	55	65	75	90
Max. axial displacement ΔK_a [mm]		-1.0	-1.0	-1.4	-1.4	-2.0	-2.0	-2.0	-2.0	-3.0	-3.0
		+1.2	+1.4	+1.5	+1.8	+2.0	+2.1	+2.2	+2.6	+3.0	+3.4
Max. radial displacement ΔK_r [mm] with n=	1500 rpm	0.45	0.59	0.66	0.77	0.84	0.91	1.01	1.17	1.33	1.48
	3000 rpm	0.40	0.53	0.60	0.70	0.75	0.82	0.81	1.05	1.19	1.33
Max. angular displacement ΔK_w [degree] with n=	1500 rpm	1.0	1.0	1.0	1.0	1.0	1.0	1.0	1.0	1.0	1.0
	3000 rpm	0.9	0.9	0.9	0.9	0.9	0.9	0.9	0.9	0.9	0.9

5 Start-up

Before start-up of the coupling, inspect the tightening of the setscrews in the hubs, the alignment and the distance dimension E or DBSE and adjust, if necessary, and also inspect all screw connections for the tightening torques specified.

If used in potentially explosive atmospheres the setscrews to fasten the hubs as well as all screw connections must be secured against working loose additionally, e. g. conglutinating with Loctite (average strength).

Finally the coupling protection against accidental contact must be fitted. It is required in accordance with DIN EN ISO 12100 (Safety of Machinery) and directives 2014/34/EU and SI 2016 No. 1107 and must protect against

- access with the little finger
- falling down of solid foreign objects.

The coupling protection is not part of KTR's scope of delivery and is the customer's responsibility. It must have sufficient distance to the rotating components to avoid contact safely. Depending on the outside diameter DH of the coupling, we recommend the following minimum distance:
ØDH to 50 mm = 6 mm, ØDH 50 mm to 120 mm = 10 mm, ØDH from 120 mm = 15 mm.

Please check if a proper enclosure (ignition protection, coupling protection, contact protection) has been mounted and the operation of the coupling is not affected by the enclosure. The same applies for test runs and rotational direction inspections.

The cover may provide for openings intended for necessary heat dissipation. These openings have to comply with DIN EN ISO 13857.
The cover must be electrically conductive and included in the equipotential bonding. Bellhousings (magnesium share below 7.5 %) made of aluminium and damping rings (NBR) can be used as connecting element between pump and electric motor. The cover may only be taken off with standstill of the unit.

If the couplings are used in locations subject to dust explosion and in mining the user must make sure that there is no accumulation of dust in a dangerous volume between the cover and the coupling. The coupling must not operate in an accumulation of dust.

For covers with unlocked openings on the top face no light metals must be used if the couplings are used as equipment of equipment group II (*if possible, from stainless steel*). If the couplings are used in mining (equipment group I M2), the cover must not be made of light metal. In addition, it must be resistant to higher mechanical loads than with use as equipment of equipment group II.

During operation of the coupling, please pay attention to

- different operating noise
- vibrations occurring.

If you note any irregularities with the coupling during operation, the drive unit must be switched off immediately. The cause of the breakdown must be specified by means of the table „Breakdowns“ and, if possible, be eliminated according to the proposals. The potential breakdowns specified can be hints only. To find out the cause all operating factors and machine components must be considered.

5 Start-up

Coating of coupling:

If coated (priming, paintings, etc.) couplings are used in potentially explosive atmospheres, the requirements on conductibility and coating thickness must be considered. With paintings up to 200 µm electrostatic load does not have to be expected. If thicker paintings resp. coatings up to a layer thickness of a maximum of 2.0 mm are applied, the couplings are not permissible for gases and vapours of category IIC in potentially explosive areas, but only for gases and vapours of category IIA and IIB.
This also applies for multiple coatings exceeding an overall thickness of 200 µm. Make sure with painting or coating that the coupling components are conductively connected with the device/devices to be connected so that the equipotential bonding is not impeded by the paint or coat applied. Basically painting of the spider is not admitted to ensure an equipotential bonding.
In addition, make sure that the marking of the coupling remains legible.

6 Breakdowns, causes and elimination

The below-mentioned failures can lead to improper use of the **ROTEX®** coupling. In addition to the specifications given in these operating/assembly instructions make sure to avoid such failures.
The errors listed can only be clues to search for the failures. When searching for the failure the adjacent components must generally be considered.

The coupling can become a source of ignition by improper use.
Directive 2014/34/EU and UK directive SI 2016 No. 1107 require special care by the manufacturer and the user.

General failures with use other than intended:

- Important data for the coupling selection are not forwarded.
- The calculation of the shaft-hub-connection is not considered.
- Coupling components with damage occurred during transport are assembled.
- When the heated hubs are assembled, the permissible temperature is exceeded.
- The clearance of the components to be assembled is not coordinated with one another.
- Tightening torques have been fallen below/exceeded.
- Components are mixed up by mistake/assembled incorrectly.
- A wrong or no spider is inserted in the coupling.
- No original **KTR** components (purchased parts) are used.
- Old/already worn out spiders or spiders stored for too long are used.
- Maintenance intervals are not observed.

6 Breakdowns, causes and elimination

Breakdowns	Causes	Hazard notes for potentially explosive atmospheres	Elimination
Different operating noise and/or vibrations occuring	Misalignment	Increased temperature on the spider surface; ignition risk by hot surfaces	1) Set the unit out of operation 2) Eliminate the reason for the misalignment (e. g. loose foundation bolts, fracture of the engine mount, heat expansion of unit components, modification of the installation dimension E of the coupling) 3) For inspection of wear see chapter 10.2
	Wear of spider, short-term torque transmission due to metal contact	Ignition risk due to sparking	1) Set the unit out of operation 2) Disassemble the coupling and remove residues of the spider 3) Inspect coupling components and replace coupling components that have been damaged 4) Insert spider, assemble coupling components 5) Inspect alignment, adjust if necessary
	Screws for axial fastening of hubs working loose	Ignition risk due to hot surfaces and sparking	1) Set the unit out of operation 2) Inspect alignment of coupling 3) Tighten the screws to fasten the hubs and secure against working loose 4) For inspection of wear see chapter 10.2
Fracture of cams	Wear of spider, torque transmission due to metal contact	Ignition risk due to sparking	1) Set the unit out of operation 2) Replace complete coupling 3) Inspect alignment
	Fracture of the cams due to high impact energy/overload		1) Set the unit out of operation 2) Replace complete coupling 3) Inspect alignment 4) Find out the reason for overload
	Operating parameters do not meet with the performance of the coupling		1) Set the unit out of operation 2) Review the operating parameters and select a bigger coupling (consider mounting space) 3) Assemble new coupling size 4) Inspect alignment
	Operating error of the unit		1) Set the unit out of operation 2) Replace complete coupling 3) Inspect alignment 4) Instruct and train the service staff
Early wear of spider	Misalignment	Increased temperature on the spider surface; ignition risk by hot surfaces	1) Set the unit out of operation 2) Eliminate the reason for the misalignment (e. g. loose foundation bolts, fracture of the engine mount, heat expansion of unit components, modification of the installation dimension E of the coupling) 3) For inspection of wear see chapter 10.2
	e. g. contact with aggressive liquids/oils, ozone influence, too high/low ambient temperatures etc. causing physical modification of the spider	Ignition risk due to sparking with metallic contact of the cams	1) Set the unit out of operation 2) Disassemble the coupling and remove residues of the spider 3) Inspect coupling components and replace coupling components that have been damaged 4) Insert spider, assemble coupling components 5) Inspect alignment, adjust if necessary 6) Make sure that further physical modifications of the spider are excluded

6 Breakdowns, causes and elimination

Breakdowns	Causes	Hazard notes for potentially explosive atmospheres	Elimination
Early wear of spider	Ambient/contact temperatures which are too high for the spider, max. permissible -30 °C/+90 °C	Ignition risk due to sparking with metallic contact of the cams	1) Set the unit out of operation 2) Disassemble the coupling and remove residues of the spider 3) Inspect coupling components and replace coupling components that have been damaged 4) Insert spider, assemble coupling components 5) Inspect alignment, adjust if necessary 6) Inspect and adjust ambient/contact temperature (correct by using other spider materials, if necessary)
Early wear of spider (liquefaction of material inside the spider cam)	Vibrations of drive		1) Set the unit out of operation 2) Disassemble the coupling and remove residues of the spider 3) Inspect coupling components and replace coupling components that have been damaged 4) Insert spider, assemble coupling components 5) Inspect alignment, adjust if necessary 6) Find out the reason for the vibrations (possibly corrective by spider with lower or higher Shore hardness)

When operating with a worn spider (see chapter 10.3) proper operation is not ensured.

7 Disposal

In respect of environmental protection we would ask you to dispose of the packaging resp. products on termination of their service life in accordance with the legal regulations resp. standards that apply.

- **Metal**
  Any metal components have to be cleaned and disposed of by scrap metal.
- **Nylon materials**
  Nylon materials have to be collected and disposed of by a waste disposal company.

8 Maintenance and service

ROTEX® is a low-maintenance coupling. We recommend to perform a visual inspection on the coupling **at least once a year**. Please pay special attention to the condition of the coupling spiders.

- Since the flexible machine bearings of the driving and driven side settle during the course of load, inspect the alignment of the coupling and re-align the coupling, if necessary.
- The coupling components have to be inspected for damages.
- The screw connections have to be inspected visually.

With the use in potentially explosive atmospheres observe chapter 10.2 "Inspection intervals for couplings in Ex potentially explosive atmospheres".

9 Spares inventory, customer service addresses

We recommend to store major spare parts on site to ensure the readiness for use of the machine in case if a coupling fails.

Contact addresses of the KTR partners for spare parts and orders can be obtained from the KTR homepage at www.ktr.com.

KTR does not assume any liability or warranty for the use of spare parts and accessories which are not provided by KTR and for the damages which may incur as a result.

KTR Systems GmbH
Carl-Zeiss-Str. 25
D-48432 Rheine
Phone: +49 5971 798-0
E-mail: mail@ktr.com

10 Enclosure A

Advice and instructions regarding the use in Ex potentially explosive atmospheres

Applicable hub designs/types:

a) Hubs that may be used in group II, category 2 and 3 :
(hubs with feather keyway and hubs with CLAMPEX® clamping set or clamping ring hubs)

- 1.0 Hub with feather keyway and setscrew
- 1.3 Hub with spline
- 1.4 Hub with feather keyway, without setscrew
- 2.1 Clamping hub single slot with feather keyway
- 2.3 Clamping hub single slot with spline
- 2.6 Clamping hub double slot with feather keyway
- 4.0 Hub with CLAMPEX® clamping set KTR 150
- 4.1 Hub with CLAMPEX® clamping set KTR 200
- 4.2 Hub with CLAMPEX® clamping set KTR 250
- 4.3 Hub with CLAMPEX® clamping set KTR 400
- 4.4 Hub with CLAMPEX® clamping set KTR 401
- 6.0 Clamping ring hub
- 6.5 Clamping ring hub (hub type as 6.0, but external clamping screws only)
- 7.1 SPLIT hub with feather keyway
- 7.6 Half shell hub (DH) with feather keyway
- 7.9 Half shell hub (H) with feather keyway
- Type standard, AFN, BFN, CF, CFN, DF, DFN, DKM, ZS-DKM, ZS-DKM-H, SP and TB with hubs corresponding to the specifications above

b) Hubs which may be used in group II, category 3 only:
(hubs without feather keyway)

- 2.0 Clamping hub single slot without feather keyway
- 2.5 Clamping hub double slot without feather keyway
- 2.8 Clamping hub with axial slot without feather keyway
- 7.0 SPLIT hub without feather keyway
- 7.5 Half shell hub (DH) without feather keyway
- 7.8 Half shell hub (H) without feather keyway
- Type standard, AFN, BFN, CF, CFN, DKM, ZS-DKM, ZS-DKM-H and SP with hubs corresponding to the specifications above

ROTEX® DKM and ROTEX® ZS-DKM only with spacer made of steel or aluminium semi-finished products with a yield point of $R_{p0.2} \geq 250$ N/mm².

Ex **Hubs, clamping hubs (SPLIT hubs) or similar types without feather keyway may be used in category 3 only and are marked with category 3 accordingly.**
The hub types 1.1 and 1.2 are not approved for potentially explosive atmospheres!

10 Enclosure A

Advice and instructions regarding the use in Ex potentially explosive atmospheres

10.1 Intended use in Ex potentially explosive atmospheres

Conditions of operation in Ex potentially explosive atmospheres

The **ROTEX®** couplings are suitable for the use according to directives 2014/34/EU and SI 2016 No. 1107.

- Protection against hazards arising from lightning must follow the lightning protection concept of the machine or plant. The relevant regulations and policy for lightning protection must be observed.
- The equipotential bonding of the couplings is made by metal contact between coupling hub and shaft. This equipotential bonding must not be affected.

1. Industry (with the exception of mining)

- Equipment group II of category 2 and 3 (*coupling is not approved/not suitable for equipment group 1*)
- Substance group G (*gases, fogs, vapours*), zone 1 and 2 (*coupling is not approved/not suitable for zone 0*)
- Substance group D (*dusts*), zone 21 and 22 (*coupling is not approved/not suitable for zone 20*)
- Explosion group IIC (*gases, fogs, vapours*) *(explosion groups IIA and IIB are included in IIC)* and explosion group IIIC (*dusts*) *(explosion groups IIIA and IIIB are included in IIIC)*

Temperature class:

Temperature class	PUR / T-PUR®	
	Ambient or operating temperature T_a 1)	Max. surface temperature 2)
T4	-30 °C to +90 °C	+110 °C
T5	-30 °C to +75 °C	+95 °C
T6	-30 °C to +60 °C	+80 °C

Explanation:
The maximum surface temperatures each result from the maximum permissible ambient or operating temperature T_a plus the maximum temperature increase ΔT of 20 K to be considered. For the temperature class a safety margin subject to standard of 5 K is added.
1) The ambient or operating temperature T_a is limited to +90 °C due to the permissible permanent operating temperature of the elastomers used.
2) The maximum surface temperature of +110 °C applies for the use in locations which are potentially subject to dust explosion.

In potentially explosive atmospheres
- the ignition temperature of dusts generated must at least be 1.5 times the surface temperature to be considered
- the glow temperature must at least be the surface temperature to be considered plus a safety distance of 75 K.
- the gases and vapours generated must amount to the temperature class specified.

2. Mining

Equipment group I of category M2 (*coupling is not approved/not suitable for equipment group M1*).
Permissible ambient temperature -30 °C to +90 °C.

10 Enclosure A

Advice and instructions regarding the use in Ex potentially explosive atmospheres

10.2 Inspection intervals for couplings in Ex potentially explosive atmospheres

Equipment category	Inspection intervals
3G 3D	For couplings operated in zone 2 or zone 22 the inspection and maintenance intervals of the usual operating/assembly instructions for standard operation apply. During the standard operation which has to be taken as a basis of the ignition risk analysis the couplings are free from any ignition source. For gases, vapours and dusts generated the permissible glow and ignition temperatures specified in chapter 10.1 have to be considered and observed.
M2 2G 2D No gases and vapours of explosion group IIC	An inspection of the torsional backlash and a visual inspection of the flexible spider must be performed after 3,000 operating hours for the first time, at the latest after 6 months after start-up of the coupling. If you note insignificant or no wear on the spider upon this initial inspection, further inspections can each be performed after 6,000 operating hours or at the latest after 18 months, provided that the operating parameters remain the same. If you note significant wear during the initial inspection so that it would be recommendable to replace the spider, find out the cause according to the table „Breakdowns“, if possible. The maintenance intervals must be adjusted to the modified operating parameters without fail.
M2 2G 2D Gases and vapours of explosion group IIC	An inspection of the torsional backlash and a visual inspection of the flexible spider must be performed after 2,000 operating hours for the first time, at the latest after 3 months after start-up of the coupling. If you note insignificant or no wear on the spider upon this initial inspection, further inspections can each be performed after 4,000 operating hours or at the latest after 12 months, provided that the operating parameters remain the same. If you note significant wear during the initial inspection so that it would be recommendable to replace the spider, find out the cause according to the table „Breakdowns“, if possible. The maintenance intervals must be adjusted to the modified operating parameters without fail.

Hubs, clamping hubs or similar types without feather keyway may be used in category 3 only and are marked with category 3 accordingly.

ROTEX® coupling

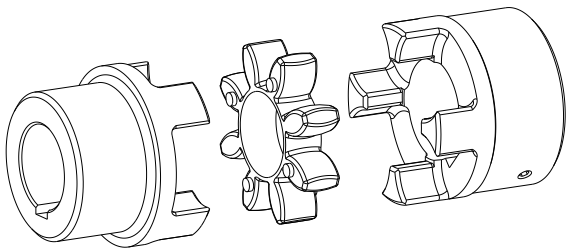

Illustration 21: ROTEX® coupling

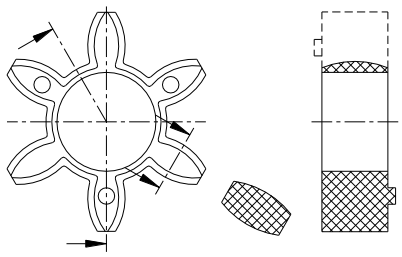

Illustration 22: ROTEX® spider

Here the backlash between the cams of the coupling and the flexible spider must be inspected by means of a feeler gauge.
When reaching the wear limit ***maximum friction***, the spider must be replaced immediately, irrespective of the inspection intervals.

10 Enclosure A

Advice and instructions regarding the use in Ex potentially explosive atmospheres

10.3 Standard values of wear

In case of backlash > X mm, the flexible spider must be replaced.

Monitoring of the general condition of the coupling can be done both at standstill and during operation. If the coupling is tested during operation, the operator must ensure an appropriate and proven test procedure (e. g. stroboscopic lamp, high-speed camera, etc.) which is definitely comparable to testing at standstill. If any distinctive features occur, an inspection must be made with the machine stopped.

Reaching the limits for replacing depends on the operating conditions and the existing operating parameters.

In order to ensure a long service life of the coupling and avoid hazards with the use in potentially explosive atmospheres, the shaft ends must be accurately aligned.
Please absolutely observe the displacement figures specified (see table 11 to 13).
If the figures are exceeded, the coupling will be damaged.

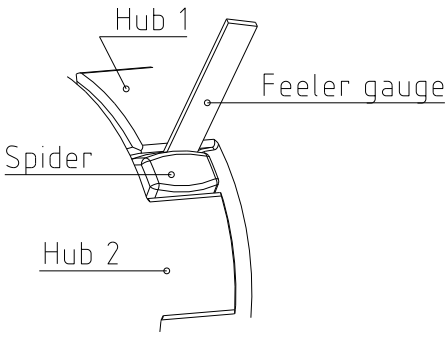

Illustration 23: Inspection of the limit of wear

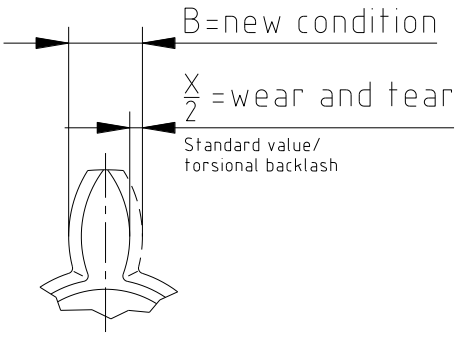

Illustration 24: Wear of spider

Table 14:

Size	Limits of wear (friction) $X_{max.}$ [mm]	Size	Limits of wear (friction) $X_{max.}$ [mm]
9	2	65	5
14	2	75	6
19	3	90	8
24	3	100	9
28	3	110	9
38	3	125	10
42	4	140	12
48	4	160	14
55	5	180	14

10 Enclosure A

Advice and instructions regarding the use in Ex potentially explosive atmospheres

10.4 Ex marking of coupling for potentially explosive atmospheres

The explosion protection marking of the ROTEX® coupling is applied on the outer sheath or on the front side. The flexible spider is excluded.

For the complete marking refer to the operating/assembly instructions and/or the delivery note/package.

<u>The following marking applies for the products:</u>

- Type without aluminium, with feather keyway and/or clamping ring hub (Category 2)

	I M2	Ex h	I				Mb	X
	II 2G	Ex h	IIC	T6	…	T4	Gb	X
	II 2D	Ex h	IIIC	T80 °C	…	T110 °C	Db	X
<Year>		-30 °C ≤ T_a ≤		+60 °C	…	+90 °C		

KTR Systems GmbH, Carl-Zeiss-Str. 25, D-48432 Rheine

- Type without aluminium, without feather keyway (Category 3)

	I M2	Ex h	I				Mb	X
	II 3G	Ex h	IIC	T6	…	T4	Gc	X
	II 3D	Ex h	IIIC	T80 °C	…	T110 °C	Dc	X
<Year>		-30 °C ≤ T_a ≤		+60 °C	…	+90 °C		

KTR Systems GmbH, Carl-Zeiss-Str. 25, D-48432 Rheine

- Type with aluminium, with feather keyway and/or clamping ring hub (Category 2)

	II 2G	Ex h	IIC	T6	…	T4	Gb	X
	II 2D	Ex h	IIIC	T80 °C	…	T110 °C	Db	X
<Year>		-30 °C ≤ T_a ≤		+60 °C	…	+90 °C		

KTR Systems GmbH, Carl-Zeiss-Str. 25, D-48432 Rheine

- Type with aluminium, without feather keyway (Category 3)

	II 3G	Ex h	IIC	T6	…	T4	Gc	X
	II 3D	Ex h	IIIC	T80 °C	…	T110 °C	Dc	X
<Year>		-30 °C ≤ T_a ≤		+60 °C	…	+90 °C		

KTR Systems GmbH, Carl-Zeiss-Str. 25, D-48432 Rheine

<u>Short marking:</u>
(A short marking is only made if not possible differently for reason of space or functioning.)

ROTEX®
<Year>

10 Enclosure A

Advice and instructions regarding the use in Ex potentially explosive atmospheres

10.4 Ex marking of coupling for potentially explosive atmospheres

Deviating marking applied until 31st October 2019:

Short marking: CE Ex II 2GD c IIC T X/I M2 c X

Complete marking:
(valid for T-PUR® only) CE Ex II 2G c IIC T6, T5, T4 resp. T3 -50 °C ≤ T_a ≤ +65 °C, +80 °C, +115 °C resp. +120 °C
II 2D c T 140 °C/I M2 c -50 °C ≤ T_a ≤ +120 °C

Complete marking:
(valid for PUR only) CE Ex II 2G c IIC T6, T5 resp. T4 -30 °C ≤ T_a ≤ +65 °C, +80 °C resp. +90 °C
II 2D c T 110 °C/I M2 c -30 °C ≤ T_a ≤ +90 °C

Comments on marking

Equipment group I	Mining
Equipment group II	Non-mining
Equipment category 2G	Equipment ensuring a high level of safety, suitable for zone 1
Equipment category 3G	Equipment ensuring a normal level of safety, suitable for zone 2
Equipment category 2D	Equipment ensuring a high level of safety, suitable for zone 21
Equipment category 3D	Equipment ensuring a normal level of safety, suitable for zone 22
Equipment category M2	Equipment ensuring a high level of safety must be able to be switched off when an explosive atmosphere occurs
D	Dust
G	Gases and vapours
Ex h	Nonelectrical explosion protection
IIC	Gases and vapours of class IIC (including IIA and IIB)
IIIC	Electrically conductive dusts of class IIIC (including IIIA and IIIB)
T6 … T4	Temperature class to be considered, depending on the ambient temperature
T80 °C … T110 °C	Maximum surface temperature to be considered, depending on the ambient temperature
-30 °C ≤ T_a ≤ +60 °C … +90 °C or -30 °C ≤ T_a ≤ +90 °C	Permissible ambient temperature from -30 °C to +60 °C resp. -30 °C to +90 °C
Gb, Db, Mb	Equipment protection level, high level of safety, analogous to the equipment category
Gc, Dc	Equipment protection level, normal level of safety, analogous to the equipment category
X	For a safe use of the couplings particular conditions apply

If the symbol Ex was punched in addition to marking U, the coupling component was supplied by KTR as an unbored or pilot bored version (see chapter 4.2 of the present operating/assembly instructions).

10 Enclosure A

Advice and instructions regarding the use in Ex potentially explosive atmospheres

10.5 EU Certificate of conformity

EU Declaration of Conformity resp. Certificate of Conformity

corresponding to EU directive 2014/34/EU dated 26 February 2014
and to the legal regulations adopted for its implementation

The manufacturer - KTR Systems GmbH, Carl-Zeiss-Str. 25, D-48432 Rheine - states that the

flexible ROTEX® couplings

in an explosion-proof design described in these assembly instructions are equipment resp. components corresponding to article 2, 1. of directive 2014/34/EU and comply with the general safety and health specifications according to enclosure II of directive 2014/34/EU.
This declaration of conformity is issued under the sole responsibility of the manufacturers KTR Systems GmbH.

The coupling described in here complies with the specifications of the following standards/rules:

EN ISO 80079-36:2016-12
EN ISO 80079-37:2016-12
EN ISO/IEC 80079-38:2017-10
IEC/TS 60079-32-1:2020-01-24

The ROTEX® is in accordance with the specifications of directive 2014/34/EU.

According to article 13 (1) b) ii) of directive 2014/34/EU the technical documentation is deposited with the notified body (type examination certificate IBExU13ATEXB016 X):

IBExU
Institut für Sicherheitstechnik GmbH
Identification number: 0637
Fuchsmühlenweg 7

09599 Freiberg

Rheine, Place	2022-07-04 Date	i. V. Reinhard Wibbeling Engineering/R&D	i. V. Michael Brüning Product Manager

10 Enclosure A

Advice and instructions regarding the use in Ex potentially explosive atmospheres

10.6 UK Declaration of conformity

UK Declaration of Conformity resp. Certificate of Conformity

corresponding to UK directive SI 2016 No. 1107 dated 26 February 2014
and to the legal provisions adopted for its implementation

The manufacturer - KTR Systems GmbH, Carl-Zeiss-Str. 25, D-48432 Rheine - states that the

flexible ROTEX® couplings

in an explosion-proof design described in these assembly instructions are equipment resp. components corresponding to directive SI 2016 No. 1107 and comply with the general safety and health requirements according to directive SI 2016 No. 1107.
This declaration of conformity resp. certificate of conformity is issued under the sole responsibility of the manufacturer KTR Systems GmbH.

The coupling described in here complies with the specifications of the following standards/rules:

EN ISO 80079-36:2016-12
EN ISO 80079-37:2016-12
EN ISO/IEC 80079-38:2017-10
IEC/TS 60079-32-1:2020-01-24

The ROTEX® is in accordance with the specifications respectively the applicable specifications of directive SI 2016 No. 1107.

According to directive SI 2016 No. 1107 the technical documentation is deposited with the notified body:

Eurofins CML
Identification number: 2503

Rheine, Place	2022-07-04 Date	i. V. Reinhard Wibbeling Engineering/R&D	i. V. Michael Brüning Product Manager