ROTEX®

Torsionally flexible jaw-type couplings

ZS-DKM,
ZS-DKM-H,
ZS-DKM-SH
and their combinations

according to directive 2014/34/EU
and UK directive SI 2016 No. 1107

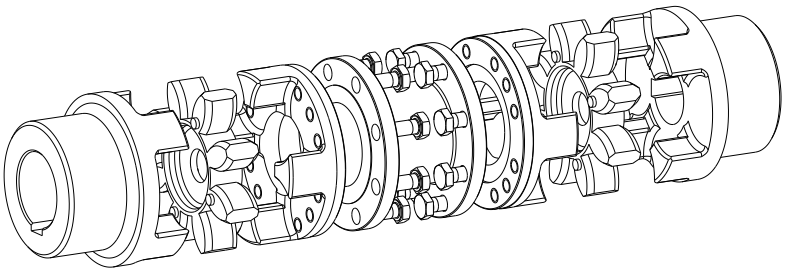

Type ZS-DKM1

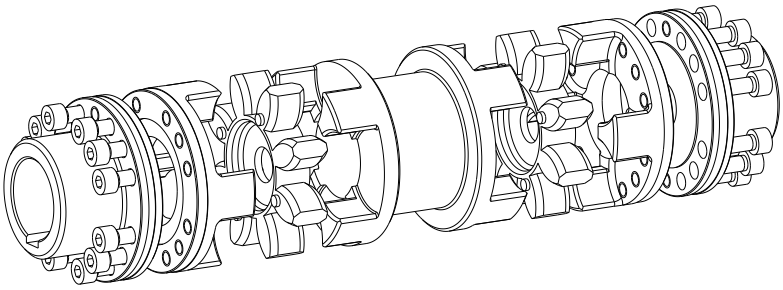

Type ZS-DKM3

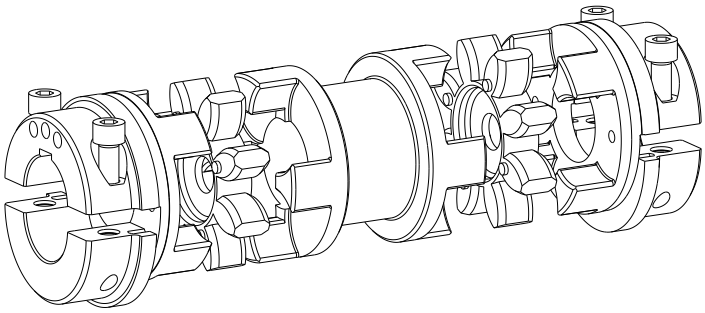

Type ZS-DKM-H

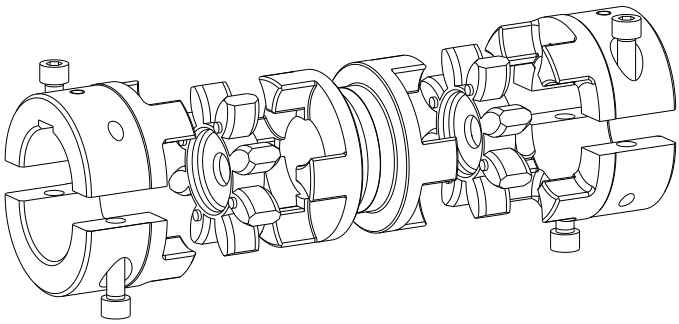

Type ZS-DKM-SH (with split hubs)

ROTEX® is a torsionally flexible jaw coupling. It is able to compensate for shaft misalignment, for example caused by manufacturing inaccuracies, thermal expansion, etc. Subject to their double-cardanic structure ROTEX® types ZS-DKM, ZS-DKM-H and ZS-DKM-SH allow to compensate for larger radial displacements. The standard series can be used with horziontal mounting only.

Table of contents

1 Technical data 3

2 Advice 7

2.1 General advice 7
2.2 Safety and advice symbols 7
2.3 General hazard warnings 7
2.4 Intended use 8
2.5 Coupling selection 8
2.6 Reference to EC Machinery Directive 2006/42/EC 8

3 Storage, transport and packaging 9

3.1 Storage 9
3.2 Transport and packaging 9

4 Assembly 9

4.1 Components of the coupling 9
4.2 Advice for finish bore 11
4.3 Assembly of the coupling (general) 13
4.4 Assembly of type ZS-DKM1 14
4.5 Assembly of type ZS-DKM3 15
4.6 Assembly of type ZS-DKM-H 16
4.7 Assembly of type ZS-DKM-SH (with SPLIT hubs) 17
4.8 Displacements - alignment of the couplings 18

5 Start-up 20

6 Breakdowns, causes and elimination 21

7 Disposal 23

8 Maintenance and service 24

9 Spares inventory, customer service addresses 24

10 Enclosure A Advice and instructions regarding the use in Ex potentially explosive atmospheres 25

10.1 Intended use in Ex potentially explosive atmospheres 26
10.2 Inspection intervals for couplings in Ex potentially explosive atmospheres 27
10.3 Standard values of wear 28
10.4 Ex marking of coupling for potentially explosive atmospheres 29
10.5 EU Certificate of conformity 31
10.6 UK Declaration of conformity 32

1 Technical data

Type ZS-DKM1

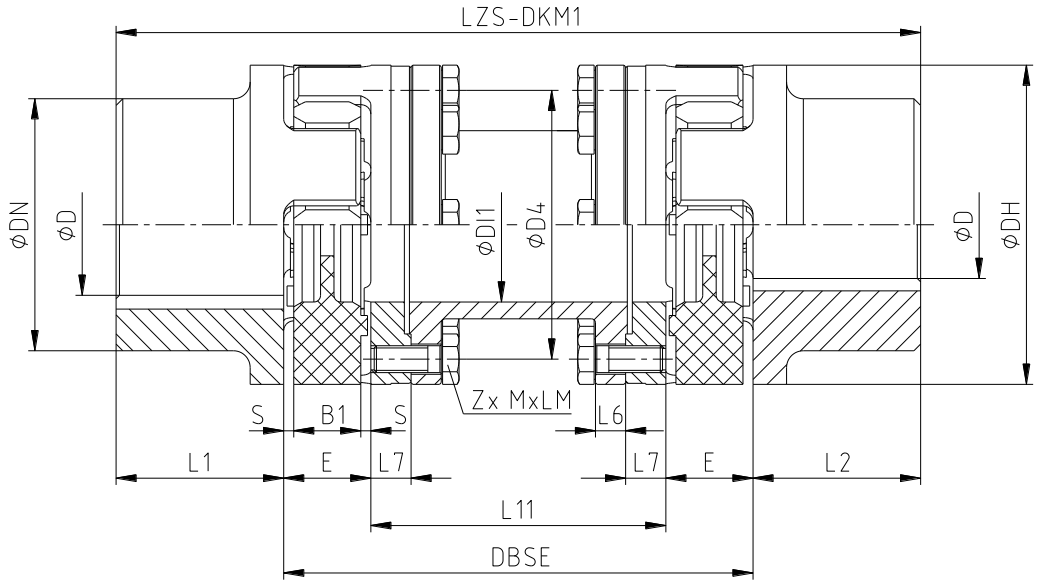

Illustration 1: ROTEX® type ZS-DKM1

Table 1: Dimensions - type ZS-DKM1

Size	Spider [1] (component 2) T_{KN} in Nm	Dimensions in mm										
		Finish bore $D_{max.}$	DH	DN	DI1	L1, L2	S	B1	E	L7	L6 [2]	D4
24	35	35	55	-	27	30	2.0	14	18	8	6/9	45
28	95	40	65	-	30	35	2.5	15	20	10	6/9 [3]	54
38	190	48	80	66	38	45	3.0	18	24	10	4/9	66
42	265	55	95	75	46	50	3.0	20	26	12	6/9	80
48	310	62	105	85	51	56	3.5	21	28	12	6/9	90
55	410	74	120	98	60	65	4.0	22	30	16	6/9	102
65	625	80	135	115	68	75	4.5	26	35	16	9	116
75	1280	95	160	135	80	85	5.0	30	40	19	9	136
90	2400	110	200	160	100	100	5.5	34	45	20	10	172
100	3300	115	225	180	105	110	6.0	38	50	25	15	195

Size	Dimensions in mm	Dimension L11 for shaft distance dimension DBSE in mm							Hexagon screws DIN EN ISO 4017 - 10.9		
	LZS-DKM1	100	120	140	160	180	200	250	MxLM	Z [4]	T_A in Nm
24	DBSE+60	64	84	104	124	144	164	214	M5x14 [5]	8	6
28	DBSE+70	60	80	100	120	140	160 [3]	210 [3]	M6x16	8	14
38	DBSE+90	52	72	92	112	132	152	202	M8x18 [6]	8	35
42	DBSE+100	-	68	88	108	128	148	198	M8x18	8	35
48	DBSE+112	-	64	84	104	124	144	194	M8x18	8	35
55	DBSE+130	-	-	80	100	120	140	190	M10x20	8	69
65	DBSE+150	-	-	-	90	110	130	180	M10x25	8	69
75	DBSE+170	-	-	-	-	100	120	170	M12x25	10	120
90	DBSE+200	-	-	-	-	-	110	160	M16x30	10	295
100	DBSE+220	-	-	-	-	-	-	150	M16x40	10	295

1) Maximum torque of the coupling $T_{Kmax.}$ = rated torque of the coupling $T_{K\ rated}$ x 2;
size 24 to size 90 - spider type 98 ShA-GS; size 100 - spider type 98 ShA with internal ring
transmittable torque as per 92 ShA-GS
2) Narrow width of flange L6 with min. L11-dimension
3) With shaft distance dimension DBSE = 200 mm and DBSE = 250 mm L6 = 30 mm
4) Per flange connection
5) Property class 8.8
6) M8x12 for DBSE = 100

1 Technical data

Type ZS-DKM3

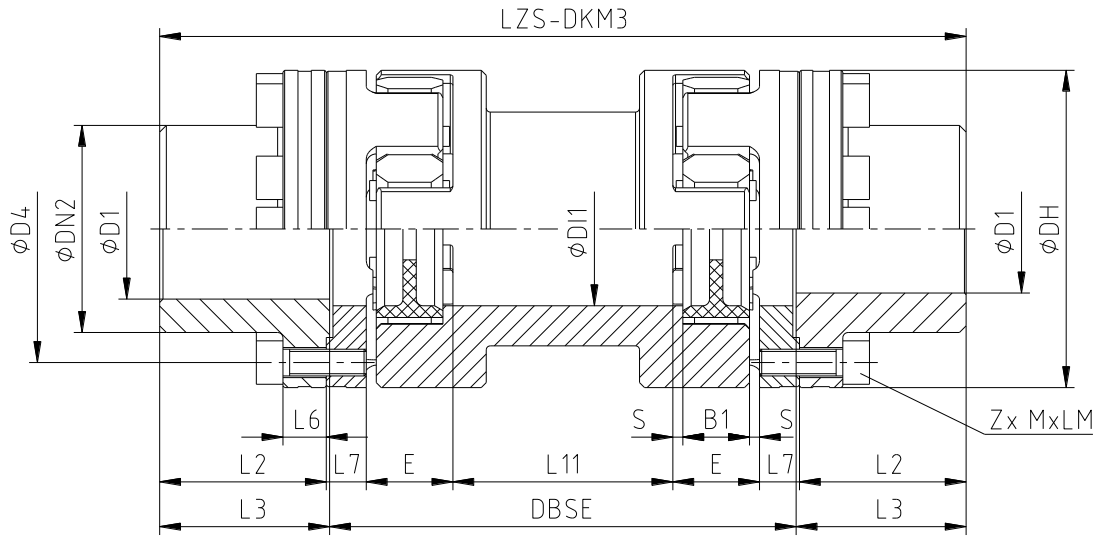

Illustration 2: ROTEX® type ZS-DKM3

Table 2: Dimensions - type ZS-DKM3

Size	Spider [1] (component 2) T_{KN} in Nm	Dimensions in mm								
		Finish bore $D1_{max.}$	DH	DN2	D4	DI1	L2	L3	L6	L7
24	35	24	55	36	45	27	30	30.5	10	8
28	95	28	65	42	54	30	35	35.5	12	10
38	190	38	80	52	66	38	45	45.5	12	10
42	265	42	95	62	80	46	50	51.0	13	12
48	310	48	105	70	90	51	56	57.0	13	12
55	410	55	120	80	102	60	65	66.0	15	16
65	625	65	135	94	116	68	75	76.0	15	16
75	1280	75	160	108	136	80	85	86.5	20	19
90	2400	100	200	142	172	100	100	101.5	20	20

Size	Dimensions in mm				Dimension L11 for shaft distance dimension DBSE in mm				Cap screws DIN EN ISO 4762 - 12.9		
	S	B1	E	LZS-DKM3	100	140	180	250	MxLM	Z [2]	T_A in Nm
24	2.0	14	18	DBSE+61	49	-	-	-	M5x16	8	10
28	2.5	15	20	DBSE+71	41	81	-	-	M6x20	8	17
38	3.0	18	24	DBSE+91	33	73	-	-	M8x22	8	41
42	3.0	20	26	DBSE+102	26	66	-	-	M8x25	12	41
48	3.5	21	28	DBSE+114	22	62	-	-	M8x25	12	41
55	4.0	22	30	DBSE+132	10	50	90	-	M10x30	8	83
65	4.5	26	35	DBSE+152	-	40	80	-	M10x30	12	83
75	5.0	30	40	DBSE+173	-	25	65	135	M12x40	15	120
90	5.5	34	45	DBSE+203	-	-	53	123	M16x40	15	295

1) Maximum torque of the coupling $T_{Kmax.}$ = Rated torque of the coupling T_{KN} x 2
Size 24 to 90 spider type 98 ShA-GS
transmittable torque acc. to 92 ShA-GS.
2) Per flange connection

1 Technical data

Type ZS-DKM-H

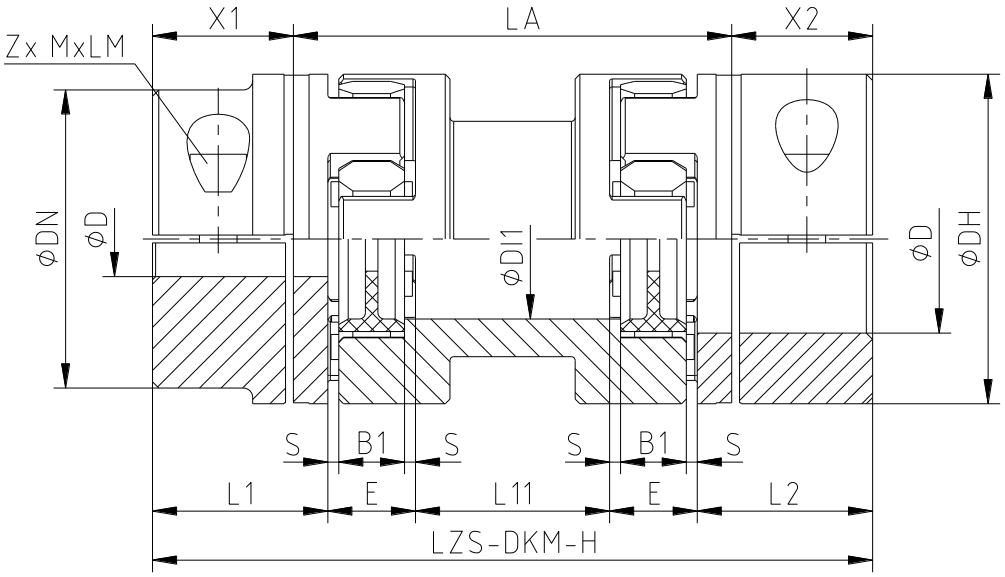

Illustration 3: ROTEX® type ZS-DKM-H

Table 3: Dimensions - type ZS-DKM-H

Size	Spider [1] (component 2) T_{KN} in Nm	Dimensions in mm								
		Finish bore $D_{max.}$	DH	DN	Dl1	L1, L2	X1, X2	S	B1	E
24	35	28	55	-	27	30	22.5	2.0	14	18
28	95	38	65	-	30	35	25.5	2.5	15	20
38	190	45	80	-	38	45	35.5	3.0	18	24
42	265	55	95	85	46	50	39.0	3.0	20	26
48	310	60	105	95	51	56	45.0	3.5	21	28
55	410	70	120	110	60	65	50.0	4.0	22	30
65	625	80	135	115	68	75	60.0	4.5	26	35
75	1280	90	160	135	80	85	67.5	5.0	30	40
90	2400	110	200	160	100	100	81.5	5.5	34	45
100	3300	110	225	180	105	110	84.0	6.0	38	50
110	4800	120	255	200	115	120	88.0	6.5	42	55
125	6650	140	290	230	133	140	105.0	7.0	46	60

Size	Dimensions in mm	Dimension L11 for shaft distance dimension LA in mm					Cap screws DIN EN ISO 4762 - 12.9			Weight [3] with shaft distance dimension LA in kg				
	LZS-DKM-H	100	140	180	200	250	MxLM	Z [2]	T_A in Nm	100	140	180	200	250
24	LA+45	49	89	-	-	-	M6x20	2	14	1.40	1.60	-	-	-
28	LA+51	41	81	-	-	-	M8x25	2	35	1.90	2.20	-	-	-
38	LA+71	33	73	-	-	-	M8x30	2	35	3.90	4.10	-	-	-
42	LA+78	26	66	-	-	-	M10x30	2	69	5.10	5.70	-	-	-
48	LA+90	22	62	-	-	-	M12x35	2	120	7.10	7.90	-	-	-
55	LA+100	10	50	90	110	-	M12x40	2	120	9.50	11.20	12.30	12.80	-
65	LA+120	-	40	80	-	-	M12x40	2	120	-	16.10	16.80	-	-
75	LA+135	-	25	65	85	135	M16x50	2	295	-	23.60	26.00	27.00	29.50
90	LA+163	-	-	53	-	123	M20x60	2	580	-	-	48.90	-	52.60
100	LA+168	-	-	-	-	98	M16x50	4	295	-	-	-	-	60
110	LA+176	-	-	-	-	76	M20x60	4	580	-	-	-	-	90
125	LA+210	-	-	-	-	60	M24x70	4	1000	-	-	-	-	120

1) Maximum torque of the coupling $T_{Kmax.}$ = rated torque of the coupling T_{KN} x 2;
size 24 to size 90 - spider type 98 ShA-GS; from size 100 - spider type 98 ShA with internal ring
transmittable torque as per 92 ShA-GS
2) each DH clamping hub
3) Referring to max. bore

1 Technical data

Type ZS-DKM-SH (with split hubs)

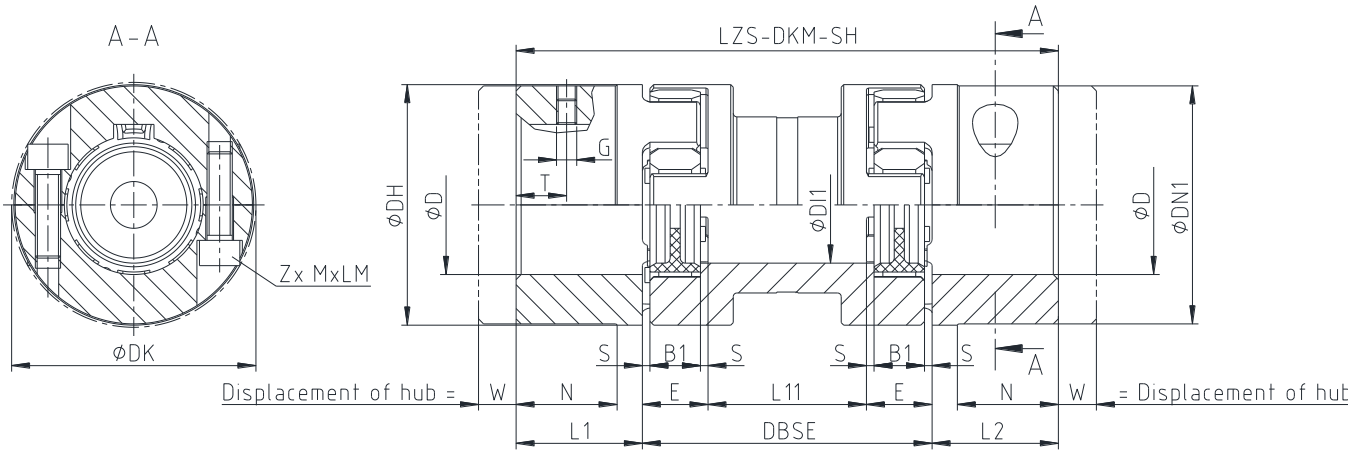

Illustration 4: ROTEX® type ZS-DKM-SH

Table 4: Dimensions - type ZS-DKM-SH

Size	Spider [1] (component 2) T_{KN} in Nm	Dimensions [2] in mm									
		Finish bore $D_{max.}$	DH	DN1	DK	DI	L1, L2	S	B1	E	W
24	35	28	55	-	57.5	27	30	2.0	14	18	12
28	95	38	65	-	73.0	30	35	2.5	15	20	12
38	190	45	80	78	83.5	38	45	3.0	18	24	15
42	265	55	95	94	97.0	46	50	3.0	20	26	15
48	310	60	105	104	108.5	51	56	3.5	21	28	15
55	410	70	120	118	122.0	60	65	4.0	22	30	15
65	625	70	135	115	132.5	68	75	4.5	26	35	15
		80		135							
75	1280	80	160	135	158.0	80	85	5.0	30	40	20
		90		160							
90	2400	90	200	160	197.0	100	100	5.5	34	45	30
		110		200							

Size	Dimensions in mm	Dimension L11 for shaft distance dimension DBSE in mm					Cap screws DIN EN ISO 4762 - 12.9			Weight [4] with shaft distance dimension DBSE in kg				
	LZS-DKM-SH	100	140	180	200	250	MxLM	Z [3]	T_A in Nm	100	140	180	200	250
24	DBSE+60	64	104	-	-	-	M6x20	2	14	1.36	1.57	-	-	-
28	DBSE+70	60	100	-	-	-	M8x25	2	34	1.95	2.22	-	-	-
38	DBSE+90	33	73	-	-	-	M8x30	2	34	3.60	3.80	-	-	-
42	DBSE+100	26	66	-	-	-	M10x35	2	67	5.20	5.70	-	-	-
48	DBSE+112	22	62	-	-	-	M12x40	2	115	6.70	7.50	-	-	-
55	DBSE+130	10	50	90	110	-	M12x45	2	115	8.80	10.30	11.60	12.10	-
65	DBSE+150	-	40	80	-	-	M12x40	2	115	-	13.50	14.20	-	-
							M12x45				15.50	16.20		
75	DBSE+170	-	25	65	85	135	M16x50	2	290	-	18.80	20.80	22.20	24.70
											22.50	24.50	25.90	28.40
90	DBSE+200	-	-	53	-	123	M20x60	2	560	-	-	38.50	-	42.30
												46.10		49.90

1) Maximum torque of the coupling $T_{Kmax.}$ = Rated torque of the coupling T_{KN} x 2
Size 24 to 90 spider type 98 ShA-GS
transmittable torque acc. to 92 ShA-GS.
2) For dimensions G and T see table 5
3) each SPLIT hub
4) Referring to max. bore

ROTEX® couplings with attachments that can generate heat, sparks and static charging (e. g. combinations with brake drums, brake disks, overload systems such as torque limiters, fan impellers etc.) are <u>not</u> permitted for the use in potentially explosive atmospheres. A separate analysis must be performed.

2 Advice

2.1 General advice

Please read through these operating/assembly instructions carefully before you start up the coupling.
Please pay special attention to the safety instructions!

The **ROTEX®** coupling is suitable and approved for the use in potentially explosive atmospheres. When using the coupling in potentially explosive atmospheres, observe the special advice and instructions regarding safety in enclosure A.

The operating/assembly instructions are part of your product. Please store them carefully and close to the coupling. The copyright for these operating/assembly instructions remains with KTR.

2.2 Safety and advice symbols

Warning of potentially explosive atmospheres	This symbol indicates notes which may contribute to preventing bodily injuries or serious bodily injuries that may result in death caused by explosion.
Warning of personal injury	This symbol indicates notes which may contribute to preventing bodily injuries or serious bodily injuries that may result in death.
Warning of product damages	This symbol indicates notes which may contribute to preventing material or machine damage.
General advice	This symbol indicates notes which may contribute to preventing adverse results or conditions.
Warning of hot surfaces	This symbol indicates notes which may contribute to preventing burns with hot surfaces resulting in light to serious bodily injuries.

2.3 General hazard warnings

With assembly, operation and maintenance of the coupling it has to be made sure that the entire drive train is secured against accidental switch-on. You may be seriously hurt by rotating parts. Make absolutely sure to read through and observe the following safety indications.

- All operations on and with the coupling have to be performed taking into account "safety first".
- Make sure to switch off the power pack before you perform your work on the coupling.
- Secure the power pack against accidental switch-on, e. g. by providing warning signs at the place of switch-on or removing the fuse for current supply.
- Do not reach into the operating area of the coupling as long as it is in operation.
- Secure the coupling against accidental contact. Provide for the necessary protection devices and covers.

2 Advice

2.4 Intended use

You may only assemble, operate and maintain the coupling if you

- have carefully read through the operating/assembly instructions and understood them
- are technically qualified and specifically trained (e. g. safety, environment, logistics)
- are authorized by your company

The coupling may only be used in accordance with the technical data (see chapter 1). Unauthorized modifications on the coupling design are not admissible. We will not assume liability for any damage that may arise. In the interest of further development we reserve the right for technical modifications.
The **ROTEX®** described in here corresponds to the state of the art at the time of printing of these operating/assembly instructions.

2.5 Coupling selection

For a permanent and failure-free operation of the coupling it must be selected according to the selection instructions (according to DIN 740 part 2) for the particular application (see catalogue drive technology "ROTEX®").
If the operating conditions (performance, speed, modifications on engine and machine) change, the coupling selection must be reviewed.
Make sure that the technical data regarding torque refer to the spider only. The transmittable torque of the shaft-hub-connection must be reviewed by the customer and is subject to his responsibility.

For drives subjected to torsional vibrations (drives with cyclic stress due to torsional vibrations) it is necessary to perform a torsional vibration calculation to ensure a reliable selection. Typical drives subjected to torsional vibrations are e. g. drives with diesel engines, piston pumps, piston compressors etc. If requested, KTR will perform the coupling selection and the torsional vibration calculation.

2.6 Reference to EC Machinery Directive 2006/42/EC

The couplings supplied by KTR should be considered as components, not machines or partly completed machines according to EC Machinery Directive 2006/42/EC. Consequently KTR does not have to issue a declaration of incorporation. For details about safe assembly, start-up and safe operation refer to the present operating/assembly instructions considering the warnings.

3 Storage, transport and packaging

3.1 Storage

The coupling hubs are supplied in preserved condition and can be stored in a dry and roofed place for 6 - 9 months.
The features of the coupling spiders (elastomers) remain unchanged for up to 5 years with favourable storage conditions.

The storage rooms must not include any ozone-generating devices like e. g. fluorescent light sources, mercury-vapour lamps or electrical high-voltage appliances.
Humid storage rooms are not suitable.
Make sure that condensation is not generated. The best relative air humidity is less than 65 %.

3.2 Transport and packaging

In order to avoid any injuries and any kind of damage always make use of proper transport and lifting equipment.

The couplings are packed differently each depending on size, number and kind of transport. Unless otherwise contractually agreed, packaging will follow the in-house packaging specifications of KTR.

4 Assembly

The coupling is generally supplied in individual parts. Before assembly the coupling has to be inspected for completeness.

4.1 Components of the coupling

Type ZS-DKM1

Component	Quantity	Description
1	2	Hub
2	2	Spider
3Na	2	Driving flange N type A
5	see table 1	Hexagon screw DIN EN ISO 4017
6x	1	ZS-DKM spacer
7	2	Setscrew DIN EN ISO 4029

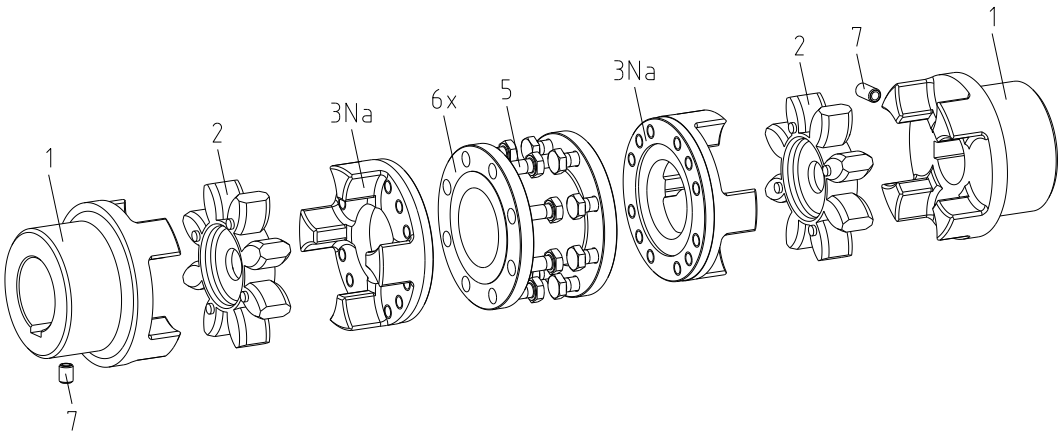

Illustration 5: ROTEX® type ZS-DKM1

4 Assembly

4.1 Components of the coupling

Type ZS-DKM3

Component	Quantity	Description
2	2	Spider
3Na	2	Driving flange N type A
4N	2	Coupling flange N
5	see table 2	Cap screw DIN EN ISO 4762
6x	1	DKM spacer spec.
7	2	Setscrew DIN EN ISO 4029

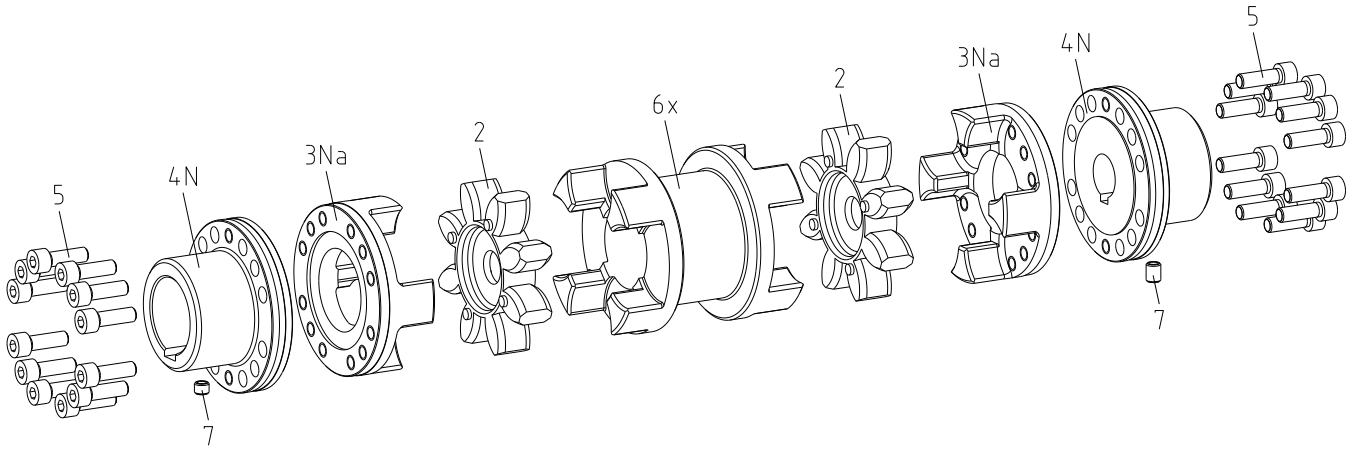

Illustration 6: ROTEX® type ZS-DKM3

Type ZS-DKM-H

Component	Quantity	Description
1Dh	2	Clamping hub type DH with half length tapered groove pin DIN EN ISO 874 (2 pieces)
2	2	Spider
5	2 [1)]	Cap screw DIN EN ISO 4762
6x	2	DKM-H spacer

1) each DH clamping hub

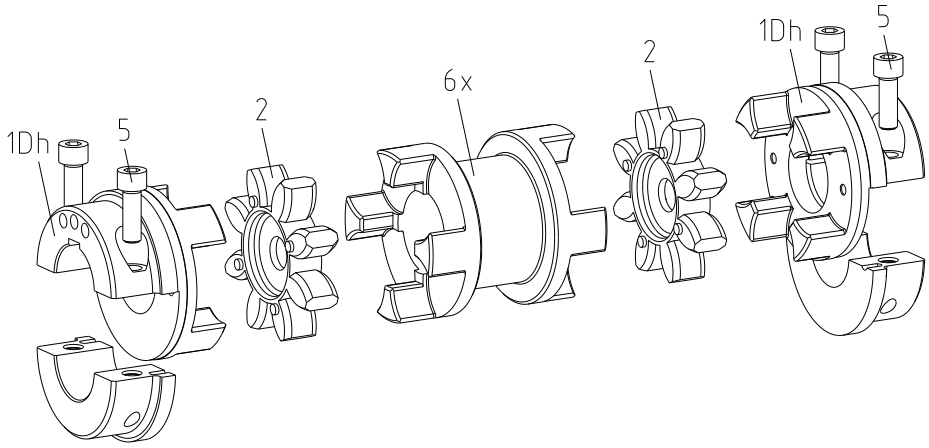

Illustration 7: ROTEX® type ZS-DKM-H

4 Assembly

4.1 Components of the coupling

Type ZS-DKM-SH (with split hubs)

Component	Quantity	Description
2	2	Spider
3	2	Setscrew DIN EN ISO 4029
6x	2	DKM-H spacer
7.1	2	SPLIT hub with cap screw DIN EN ISO 4762 (2 pieces [1])

1) each SPLIT hub

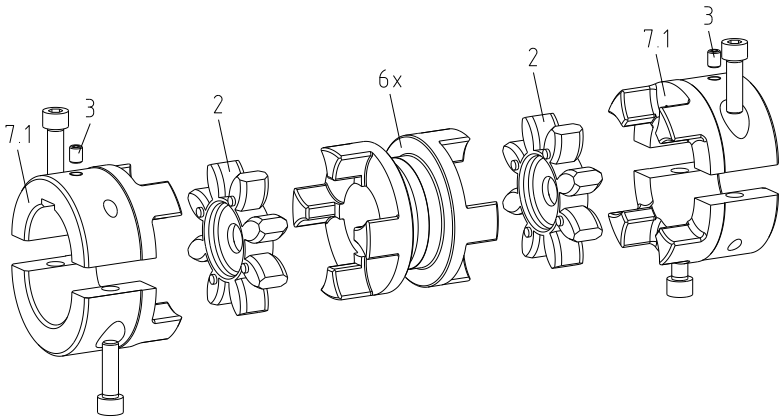

Illustration 8: ROTEX® type ZS-DKM-SH

Features of standard spiders

Spider hardness (Shore)	98 ShA-GS PUR (red)
Marking (colour)	

4.2 Advice for finish bore

STOP

The maximum permissible bore diameters D (see chapter 1 - technical data) must not be exceeded. If these figures are disregarded, the coupling may tear. Rotating particles may cause danger to life.

- Hub bores machined by the customer have to observe concentricity resp. axial runout (see illustration 9).
- Make absolutely sure to observe the figures for ØD.
- Carefully align the hubs when the finish bores are drilled.
- **Only valid with design ZS-DKM1 and ZS-DKM3:** Provide for a setscrew according to DIN EN ISO 4029 with a cup point or an end plate to fasten the hubs axially.

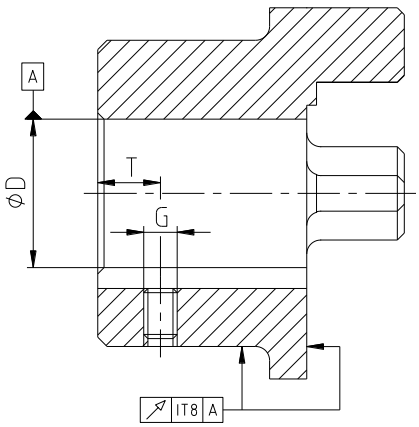

Illustration 9: Concentricity and axial runout

4 Assembly

4.2 Advice for finish bore

The customer bears the sole responsibility for all machining processes performed subsequently on unbored or pilot bored as well as finish machined coupling components and spare parts. KTR does not assume any warranty claims resulting from insufficient remachining.

KTR supplies unbored or pilot bored coupling components and spare parts only upon explicit request of the customer. These parts are additionally marked with the symbol Ⓤ.

Reference to unbored resp. pilot bored coupling components with explosion protection marking:
Basically the company KTR Systems GmbH supplies couplings resp. coupling hubs with explosion protection marking as an unbored or pilot bored type only on explicit request of the customer. The prerequisite is a declaration of exemption submitted by the customer assuming any responsibility and liability for respective remachining performed on the product of KTR Systems GmbH.

Table 5: Setscrew DIN EN ISO 4029

Size	24	28	38	42	48	55	65	75	90	100
Dimension G in mm	M5	M8	M8	M8	M8	M10	M10	M10	M12	M12
Dimension T in mm	10	15	15	20	20	20	20	25	30	30
Tightening torque T_A in Nm	2	10	10	10	10	17	17	17	40	40

Table 6: Recommended fit pairs acc. to DIN 748-1

Bore in mm		Shaft tolerance	Bore tolerance
above	up to		
	50	k6	H7 (KTR standard)
50		m6	

If a feather keyway is intended to be used in the hub, it should correspond to the tolerance ISO JS9 (KTR standard) with normal operating conditions or ISO P9 with difficult operating conditions (frequently alternating torsional direction, shock loads, etc.). The keyway should preferably be located between the cams. With axial fastening by the setscrew the tapped hole should be located on the keyway.

The transmittable torque of the shaft-hub-connection must be reviewed by the customer and is subject to his responsibility.

4 Assembly

4.3 Assembly of the coupling (general)

We recommend to inspect bores, shaft, keyway and feather key for dimensional accuracy before assembly.

Heating the hubs lightly (approx. 80 °C) allows for an easier mounting on the shaft. Not necessary with type ZS-DKM-H and ZS-DKM-SH.

Please pay attention to the ignition risk in potentially explosive atmospheres!

Touching the heated hubs causes burns.
Please wear safety gloves.

With the assembly make sure that the dimension DBSE, LA resp. B1 (see table 1 to 4) is observed to allow for axial clearance of the spider when in operation.
Disregarding this advice may cause damage to the coupling.

If used in potentially explosive atmospheres the setscrews to fasten the hubs as well as all screw connections must be secured against working loose additionally, e. g. conglutinating with Loctite (average strength).

4 Assembly

4.4 Assembly of type ZS-DKM1

- Mount the hubs on the shaft of driving and driven side (see illustration 10).
- The internal sides of the hubs must be flush with the front sides of the shafts.
- Shift the power packs in axial direction until the distance dimension DBSE or B1 is achieved (see illustration 1 and table 1).
- Fasten the hubs by tightening the setscrews DIN EN ISO 4029 with a cup point (tightening torque see table 5).

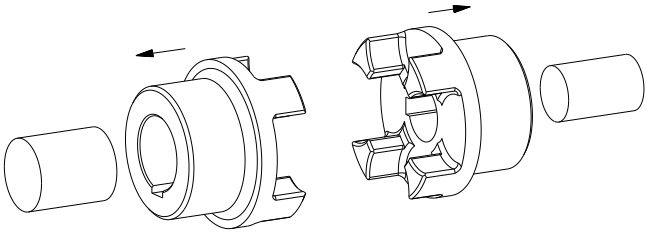

Illustration 10: Assembly of hubs

- Insert the spiders in the cam section of the hubs (see illustration 11).

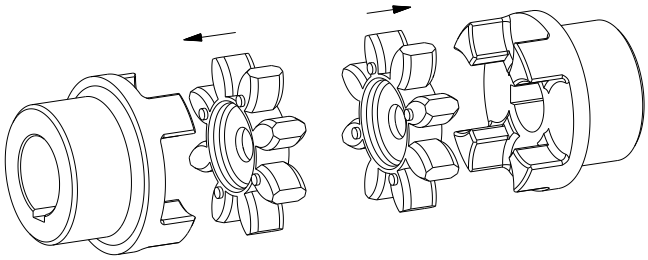

Illustration 11: Assembly of spiders

- Insert the driving flanges with the cams in the spider (see illustration 12).

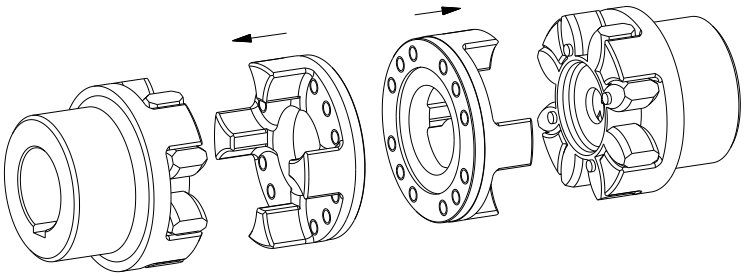

Illustration 12: Assembly of driving flanges

- Insert the spacer ZS-DKM between the driving flanges (see illustration 13).
- Hand-tighten the components first.
- The screws have to be tightened at the tightening torques T_A specified in table 1 by means of a suitable torque wrench.
- Centre the spiders between the driving flanges and hubs and check the dimension E and S (see illustration 1 and table 1).

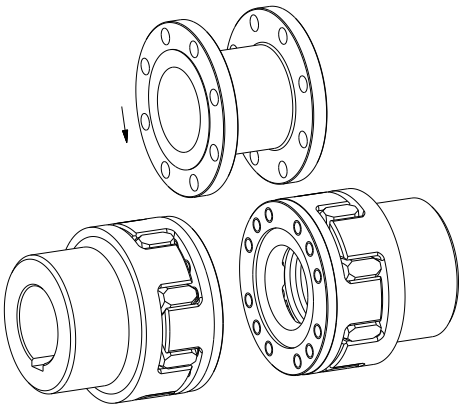

Illustration 13: Assembly of ZS-DKM spacer

Having started up the coupling, the wear of spider has to be inspected at regular maintenance intervals and the spider has to be replaced, if necessary.

4 Assembly

4.5 Assembly of type ZS-DKM3

- Mount the coupling flanges on the shaft of driving and driven side (see illustration 14).
- The internal sides of the coupling flanges must be flush with the front sides of the shafts.
- Shift the power packs in axial direction until the distance dimension DBSE is achieved (see illustration 2 and table 2).
- Fasten the coupling flanges by tightening the setscrews DIN EN ISO 4029 with a cup point (tightening torque see table 5).

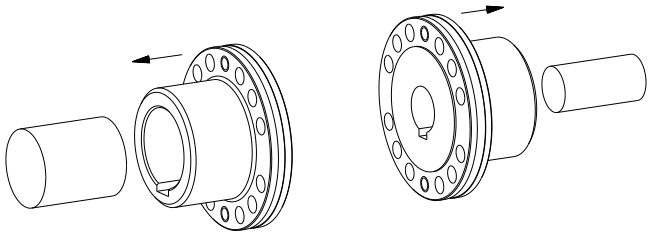

Illustration 14: Assembly of coupling flanges

- Plug the driving flanges, the spiders and the DKM spacer spec. (see illustration 15).

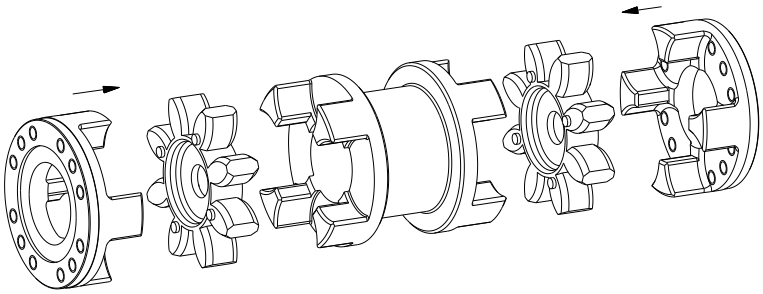

Illustration 15: Assembly of driving flanges, spiders and DKM spacer

- Put the components plugged together between the coupling flanges (see illustration 16).
- Hand-tighten the components first.
- Tighten the screws at the tightening torques T_A specified in table 2 by means of a suitable torque key.
- Centre the spiders between the driving flanges and DKM spacer spec. and check the dimension E and S (see illustration 2 and table 2).

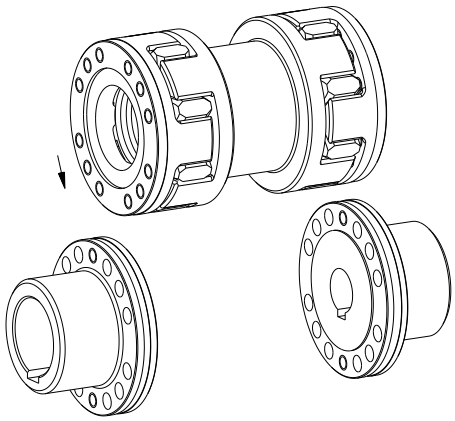

Illustration 16: Assembly of subassembly

Having started up the coupling, the wear of spider has to be inspected at regular maintenance intervals and the spider has to be replaced, if necessary.

4 Assembly

4.6 Assembly of type ZS-DKM-H

- Remove the half shells from the hub body (see illustration 17).

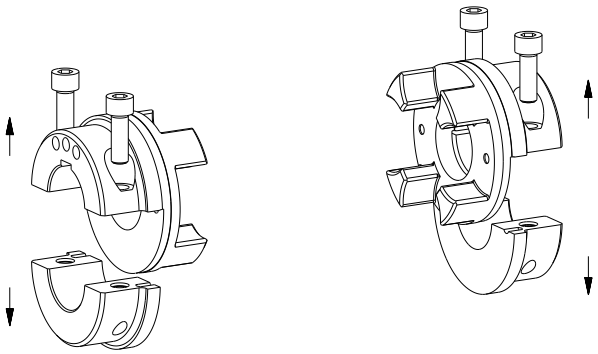

Illustration 17: Disassembly of shells

- Fit the hub bodies together with the spiders and DKM-H spacer (see illustration 18).

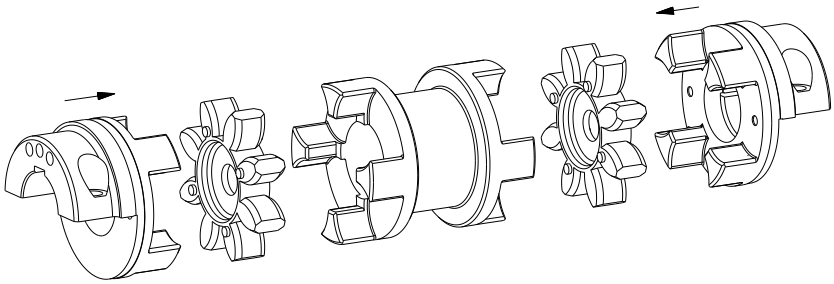

Illustration 18: Assembly of hub bodies, spiders and DKM-H spacer

- Mount the fitted unit along with the half shells and the clamping screws on the shaft ends of the driving and driven machine (see illustration 19).
- Hand-tighten the components first until the hub bodies with the half shells fit closely to the shaft.
- Shift the clamping hubs type DH in axial direction until the dimension LZS-DKM-H or LA specified in table 3 is achieved.
- Secure the clamping hubs type DH by tightening the clamping screws reciprocally. The screws have to be tightened at the tightening torques T_A specified in table 3 by means of a suitable torque wrench.

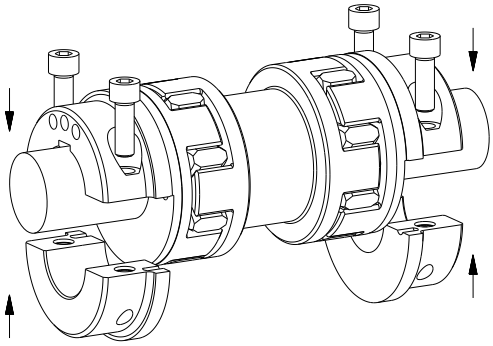

Illustration 19: Assembly of subassembly on the shafts

- Centre the spiders between the clamping hubs type DH and DKM-H spacer and check the dimension E and S (see illustration 3 and table 3).

Having started up the coupling, the wear of spider has to be inspected at regular maintenance intervals and the spider has to be replaced, if necessary.

Clamping hubs without feather keyway may be used in category 3 <u>only</u> and are marked with category 3 accordingly.

4 Assembly

4.7 Assembly of type ZS-DKM-SH (with SPLIT hubs)

- Remove the cap screws from the hubs.

☞ **If the half shells cannot be separated from each other, the separation process must be initiated via a suitable tool (mounting hammer).**

- Put the upper shell of the first SPLIT hub with the cap screws installed on the shaft (see illustration 20).
- Align the lower shell of the first SPLIT hub with the upper shell under the shaft (see illustration 21). Screw in the cap screws over several pitches.
- Align the upper and lower half shell based on the outer shape so that the fracture surfaces fit exactly.

⚠ **The half shell pairs of the two SPLIT hubs must not be interchanged, since the fracture surfaces of the respective hubs <u>only</u> fit exactly.**

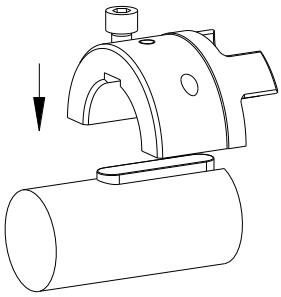

Illustration 20: Assembly of half shell

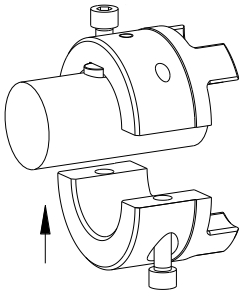

Illustration 21: Assembly of SPLIT hub on the shaft

- Hand-tighten the cap screws.
- Repeat the assembly of the first SPLIT hub described in here with the second SPLIT hub.
- Insert the spiders in the cam section of the SPLIT hubs (see illustration 22).
- Insert the DKM-H spacer (see illustration 23) and shift the power packs in axial direction until the distance dimension E and S is achieved (see illustration 4 and table 4).
- Tighten the cap screws of the SPLIT hubs reciprocally by means of a suitable torque key to the tightening torques T_A specified in table 4.
- Fasten the hubs by tightening the setscrews DIN EN ISO 4029 with a cup point (tightening torque see table 5).

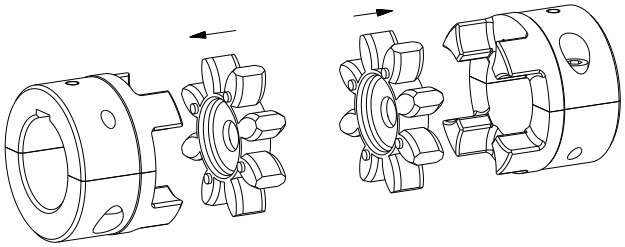

Illustration 22: Assembly of spiders

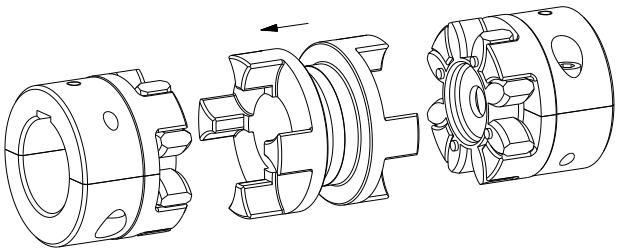

Illustration 23: Assembly of the DKM-H spacer

☞ **The cracked surfaces of the ROTEX® SH SPLIT hub halves must be inspected for cleanliness before assembly.**
If necessary, clean the cracked surfaces of the EN-GJL hubs with a wire bush to ensure an optimal fit.

☞ **When disassembling the ROTEX® SH SPLIT EN-GJL hubs, small casting particles may come loose from the cracked surface, but the function is not affected.**

⚠ **Having started up the coupling, the wear of spider has to be inspected at regular maintenance intervals and the spider has to be replaced, if necessary.**

4 Assembly

4.7 Assembly of type ZS-DKM-SH (with SPLIT hubs)

Clamping hubs (SPLIT hubs) without feather keyways may be used in category 3 <u>only</u> and are marked with category 3 accordingly.

4.8 Displacements - alignment of the couplings

The displacement figures specified in table 7 to 9 provide for sufficient safety to compensate for external influences like, for example, heat expansion or foundation settling.

In order to ensure a long service life of the coupling and avoid hazards with the use in potentially explosive atmospheres, the shaft ends must be accurately aligned.
Please absolutely observe the displacement figures specified (see table 7 to 9). If the figures are exceeded, the coupling will be damaged.
The more accurate the alignment of the coupling, the longer is its service life.
If used in potentially explosive atmospheres for explosion group IIC, only half of the displacement figures (see table 7 to 9) are permissible.

<u>Please note:</u>

- The displacement figures specified in table 7 to 9 are maximum figures which must not arise in parallel. If radial and angular displacements arise simultaneously, the permissible displacement figures may only be used proportionally (see illustration 25).
- Inspect with a dial gauge, ruler or feeler whether the permissible displacement figures of tables 7 to 9 can be observed.

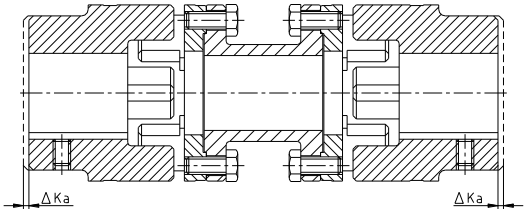

Axial displacements

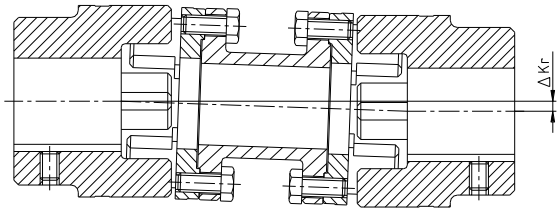

Radial displacements

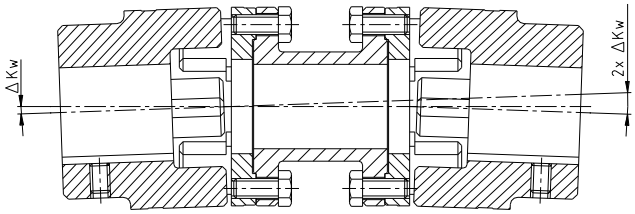

Angular displacements

Illustration 24: Displacements

Examples of displacements of ZS-DKM1.

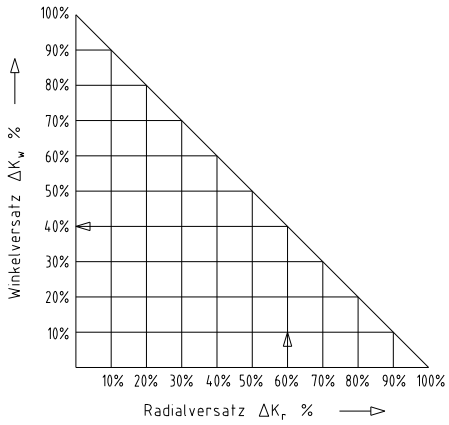

Illustration 25: Combinations of displacement

<u>Example:</u>

ROTEX® 24 ZS-DKM1,
speed 1500 rpm,
shaft distance dimension L = 160,
max. radial displacement ΔK_r = 2.48 mm
max. angular displacement ΔK_w = 1°

with radial displacement of 1.5 mm = 60 % of the max. radial displacement 2.48 mm,

results in a permissible angular displacement of 40 % of the max. angular displacement 1° = 0.4°

$\Delta K_{total} = \Delta K_w + \Delta K_r \leq 100\ \%$

4 Assembly

4.8 Displacements - alignment of the couplings

Table 7: Displacement figures for type ZS-DKM1 (spider 98 ShA-GS)

Size	Max.axial displacement ΔK_a in mm	Max. radial displacement ΔK_r in mm with shaft distance dimension L with n=														Max. angular displacement ΔK_w in degree with n=	
		1500 rpm							3000 rpm								
		100	120	140	160	180	200	250	100	120	140	160	180	200	250	1500 rpm	3000 rpm
24	1.4	1.43	1.78	2.13	2.48	2.83	3.18	4.05	1.07	1.34	1.60	1.86	2.12	2.38	3.04	1.0	0.75
28	1.5	1.40	1.75	2.09	2.44	2.79	3.14	4.01	1.05	1.31	1.57	1.83	2.09	2.36	3.01	1.0	0.75
38	1.8	1.33	1.68	2.02	2.37	2.72	3.07	3.94	0.99	1.26	1.52	1.78	2.04	2.30	2.96	1.0	0.75
42	2.0	-	1.64	1.99	2.34	2.69	3.04	3.91	-	1.23	1.49	1.75	2.02	2.28	2.93	1.0	0.75
48	2.1	-	1.61	1.95	2.30	2.65	3.00	3.87	-	1.20	1.46	1.73	1.99	2.25	2.91	1.0	0.75
55	2.2	-	-	1.92	2.27	2.62	2.97	3.84	-	-	1.44	1.70	1.96	2.23	2.88	1.0	0.75
65	2.6	-	-	-	2.18	2.53	2.88	3.75	-	-	-	1.63	1.90	2.16	2.81	1.0	0.75
75	3.0	-	-	-	-	2.44	2.79	3.67	-	-	-	-	1.83	2.09	2.75	1.0	0.75
90	3.4	-	-	-	-	-	2.70	3.58	-	-	-	-	-	2.03	2.68	1.0	0.75
100	3.8	-	-	-	-	-	-	3.49	-	-	-	-	-	-	2.62	1.0	0.75

Table 8: Displacement figures for type ZS-DKM3 and ZS-DKM-H (spider 98 ShA-GS)

Size	Max. axial displacement DKa in mm	Max. radial displacement ΔK_r in mm with shaft distance dimension L with n=										Max. angular displacement ΔK_w in degree with n=	
		1500 rpm					3000 rpm						
		100	140	180	200	250	100	140	180	200	250	1500 rpm	3000 rpm
24	1.4	1.17	1.87 [1)]	-	-	-	0.87	1.40 [1)]	-	-	-	1.0	0.75
28	1.5	1.06	1.76	-	-	-	0.80	1.32	-	-	-	1.0	0.75
38	1.8	0.99	1.69	-	-	-	0.74	1.27	-	-	-	1.0	0.75
42	2.0	0.91	1.60	-	-	-	0.68	1.20	-	-	-	1.0	0.75
48	2.1	0.87	1.57	-	-	-	0.65	1.18	-	-	-	1.0	0.75
55	2.2	0.70	1.40	2.09	2.44 [1)]	-	0.52	1.05	1.57	1.83 [1)]	-	1.0	0.75
65	2.6	-	1.31	2.00	-	-	-	0.98	1.50	-	-	1.0	0.75
75	3.0	-	1.13	1.83	2.19 [1)]	3.05	-	0.85	1.37	1.64 [1)]	2.29	1.0	0.75
90	3.4	-	-	1.71	-	2.93	-	-	1.28	-	2.19	1.0	0.75
100 [1)]	3.4	-	-	-	-	2.6	-	-	-	-	-	1.0	-
110 [1)]	3.4	-	-	-	-	2.3	-	-	-	-	-	1.0	-
125 [1)]	3.4	-	-	-	-	1.6	-	-	-	-	-	1.0	-

1) only type ZS-DKM-H

Table 9: Displacement figures for type ZS-DKM-SH (spider 98 ShA-GS)

Size	Max. axial displacement DKa in mm	Max. radial displacement ΔK_r in mm with shaft distance dimension L with n=										Max. angular displacement ΔK_w in degree with n=	
		1500 rpm					3000 rpm						
		100	140	180	200	250	100	140	180	200	250	1500 rpm	3000 rpm
24	1.4	1.43	2.13	-	-	-	1.07	1.60	-	-	-	1.0	0.75
28	1.5	1.40	2.10	-	-	-	1.05	1.57	-	-	-	1.0	0.75
38	1.8	1.33	2.02	-	-	-	0.99	1.52	-	-	-	1.0	0.75
42	2.0	1.29	2.00	-	-	-	0.97	1.49	-	-	-	1.0	0.75
48	2.1	1.26	1.95	-	-	-	0.94	1.47	-	-	-	1.0	0.75
55	2.2	1.22	1.92	2.62	2.97	-	0.92	1.44	1.96	2.22		1.0	0.75
65	2.6	-	1.83	2.53	-	-	-	1.37	1.90	-	-	1.0	0.75
75	3.0	-	1.75	2.44	2.79	3.67	-	1.31	1.83	2.09	2.75	1.0	0.75
90	3.4	-	-	2.36	-	3.58	-	-	1.76	-	2.68	1.0	0.75

5 Start-up

Before start-up of the coupling, inspect the tightening of the setscrews in the hubs, the alignment and the distance dimension E and adjust, if necessary, and also inspect all screw connections for the tightening torques specified.

If used in potentially explosive atmospheres the setscrews to fasten the hubs as well as all screw connections must be secured against working loose additionally, e. g. conglutinating with Loctite (average strength).

Finally the coupling protection against accidental contact must be fitted. It is required in accordance with DIN EN ISO 12100 (Safety of Machinery) and directives 2014/34/EU and SI 2016 No. 1107 and must protect against

- access with a little finger
- falling down of solid foreign objects.

The coupling protection is not part of KTR's scope of delivery and is the customer's responsibility. It must have sufficient distance to the rotating components to avoid contact safely. Depending on the outside diameter DH of the coupling, we recommend the following minimum distance:
ØDH to 50 mm = 6 mm, ØDH 50 mm to 120 mm = 10 mm, ØDH from 120 mm = 15 mm.

Please check if a proper enclosure (ignition protection, coupling protection, contact protection) has been mounted and the operation of the coupling is not affected by the enclosure. The same applies for test runs and rotational direction inspections.

The cover may provide for openings intended for necessary heat dissipation. These openings have to comply with DIN EN ISO 13857.
The cover must be electrically conductive and included in the equipotential bonding. Bellhousings (magnesium share below 7.5 %) made of aluminium and damping rings (NBR) can be used as connecting element between pump and electric motor. The cover may only be taken off with standstill of the unit.

If the couplings are used in locations subject to dust explosion and in mining the user must make sure that there is no accumulation of dust in a dangerous volume between the cover and the coupling. The coupling must not operate in an accumulation of dust.

For covers with unlocked openings on the top face no light metals must be used if the couplings are used as equipment of equipment group II (*if possible, from stainless steel*).
If the couplings are used in mining (equipment group I M2), the cover must not be made of light metal. In addition, it must be resistant to higher mechanical loads than with use as equipment of equipment group II.

During operation of the coupling, please pay attention to

- different operating noise
- vibrations occurring.

If you note any irregularities with the coupling during operation, the drive unit must be switched off immediately. The cause of the breakdown must be specified by means of the table „Breakdowns“ and, if possible, be eliminated according to the proposals. The potential breakdowns specified can be hints only. To find out the cause all operating factors and machine components must be considered.

5 Start-up

Coating of coupling:

If coated (priming, paintings, etc.) couplings are used in potentially explosive atmospheres, the requirements on conductibility and coating thickness must be considered. With paintings up to 200 µm electrostatic load does not have to be expected. If thicker paintings resp. coatings up to a layer thickness of a maximum of 2.0 mm are applied, the couplings are not permissible for gases and vapours of category IIC in potentially explosive areas, but only for gases and vapours of category IIA and IIB.
This also applies for multiple coatings exceeding an overall thickness of 200 µm. Make sure with painting or coating that the coupling components are conductively connected with the device/devices to be connected so that the equipotential bonding is not impeded by the paint or coat applied. Basically painting of the spider is not admitted to ensure an equipotential bonding.
In addition, make sure that the marking of the coupling remains legible.

6 Breakdowns, causes and elimination

The below-mentioned failures can lead to a use of the **ROTEX®** coupling other than intended. In addition to the specifications given in these operating/assembly instructions make sure to avoid such failures.
The errors listed can only be clues to search for the failures. When searching for the failure the adjacent components must generally be considered.

The coupling can become a source of ignition with improper use.
Directive 2014/34/EU and UK directive SI 2016 No. 1107 require special care by the manufacturer and the user.

General failures with improper use:

- Important data for the coupling selection are not forwarded.
- The calculation of the shaft-hub-connection is not considered.
- Coupling components with damage occurred during transport are assembled.
- If the heated hubs are assembled, the permissible temperature is exceeded.
- The clearance of the components to be assembled is not coordinated with one another.
- Tightening torques are fallen below/exceeded.
- Components are mixed up by mistake/assembled incorrectly.
- A wrong or no spider is inserted in the coupling.
- No original **KTR** components (purchased parts) are used.
- Old/already worn out spiders or spiders stored for too long are used.
- Maintenance intervals are not observed.

6 Breakdowns, causes and elimination

Breakdowns	Causes	Hazard notes for potentially explosive atmospheres	Elimination
Different operating noise and/or vibrations occuring	Misalignment	Increased temperature on the spider surface; ignition risk by hot surfaces	1) Set the unit out of operation 2) Eliminate the reason for the misalignment (e. g. loose foundation bolts, breaking of the engine mount, heat expansion of unit components, modification of the installation dimension E of the coupling) 3) For inspection of wear see chapter 10.2
	Wear of spider, short-term torque transmission due to metal contact	Ignition risk due to sparking	1) Set the unit out of operation 2) Disassemble the coupling and remove residues of the spider 3) Inspect coupling components and replace coupling components that have been damaged 4) Insert spider, assemble coupling components 5) Inspect alignment, adjust if necessary
	Screws for axial fastening of hubs working loose	Ignition risk due to hot surfaces and sparking	1) Set the unit out of operation 2) Inspect alignment of coupling 3) Tighten the screws to fasten the hubs and secure against working loose 4) For inspection of wear see chapter 10.2
Breaking of cams	Wear of spider, torque transmission due to metal contact	Ignition risk due to sparking	1) Set the unit out of operation 2) Replace complete coupling 3) Inspect alignment
	Breaking of the cams due to high impact energy/overload		1) Set the unit out of operation 2) Replace complete coupling 3) Inspect alignment 4) Find out the reason for overload
	Operating parameters do not meet with the performance of the coupling		1) Set the unit out of operation 2) Review the operating parameters and select a bigger coupling (consider mounting space) 3) Assemble new coupling size 4) Inspect alignment
	Operating error of the unit		1) Set the unit out of operation 2) Replace complete coupling 3) Inspect alignment 4) Instruct and train the service staff
Early wear of spider	Misalignment	Increased temperature on the spider surface; ignition risk by hot surfaces	1) Set the unit out of operation 2) Eliminate the reason for the misalignment (e. g. loose foundation bolts, breaking of the engine mount, heat expansion of unit components, modification of the installation dimension E of the coupling) 3) For inspection of wear see chapter 10.2
	e. g. contact with aggressive liquids/oils, ozone influence, too high/low ambient temperatures etc. causing physical modification of the spider	Ignition risk due to sparking with metallic contact of the cams	1) Set the unit out of operation 2) Disassemble the coupling and remove residues of the spider 3) Inspect coupling components and replace coupling components that have been damaged 4) Insert spider, assemble coupling components 5) Inspect alignment, adjust if necessary 6) Make sure that further physical modifications of the spider are excluded

6 Breakdowns, causes and elimination

Breakdowns	Causes	Hazard notes for potentially explosive atmospheres	Elimination
Early wear of spider	Ambient/contact temperatures which are too high for the spider, max. permissible -30 °C/+90 °C	Ignition risk due to sparking with metallic contact of the cams	1) Set the unit out of operation 2) Disassemble the coupling and remove residues of the spider 3) Inspect coupling components and replace coupling components that have been damaged 4) Insert spider, assemble coupling components 5) Inspect alignment, adjust if necessary 6) Inspect and adjust ambient/contact temperature (correct by using other spider materials, if necessary)
Early wear of spider (liquefaction of material inside the spider cam)	Vibrations of drive		1) Set the unit out of operation 2) Disassemble the coupling and remove residues of the spider 3) Inspect coupling components and replace coupling components that have been damaged 4) Insert spider, assemble coupling components 5) Inspect alignment, adjust if necessary 6) Find out the reason for the vibrations (possibly corrective by spider with lower or higher Shore hardness)

When operating with a worn spider (see chapter 10.3) proper operation is not ensured.

7 Disposal

In respect of environmental protection we would ask you to dispose of the packaging resp. products on termination of their service life in accordance with the legal regulations resp. standards that apply.

- **Metal**
  Any metal components have to be cleaned and disposed of by scrap metal.
- **Nylon materials**
  Nylon materials have to be collected and disposed of by a waste disposal company.

8 Maintenance and service

ROTEX® is a low-maintenance coupling. We recommend to perform a visual inspection on the coupling **at least once a year**. Please pay special attention to the condition of the coupling spiders.

- Since the flexible machine bearings of the driving and driven side settle during the course of load, inspect the alignment of the coupling and re-align the coupling, if necessary.
- The coupling components have to be inspected for damages.
- The screw connections have to be inspected visually.

With the use in potentially explosive atmospheres observe chapter 10.2 "Inspection intervals for couplings in Ex potentially explosive atmospheres".

9 Spares inventory, customer service addresses

We recommend to store major spare parts on site to ensure the readiness for use of the machine in case if a coupling fails.

Contact addresses of the KTR partners for spare parts and orders can be obtained from the KTR homepage at www.ktr.com.

KTR does not assume any liability or warranty for the use of spare parts and accessories which are not provided by KTR and for the damages which may incur as a result.

KTR Systems GmbH
Carl-Zeiss-Str. 25
D-48432 Rheine
Phone: +49 5971 798-0
E-mail: mail@ktr.com

10 Enclosure A

Advice and instructions regarding the use in Ex potentially explosive atmospheres

Applicable hub designs/types:

a) Hubs that may be used in group II, category 2 and 3:
(hubs with feather keyway)

- 1.0 Hub with feather keyway and setscrew
- 1.3 Hub with spline
- 1.4 Hub with feather keyway, without setscrew
- 2.1 Clamping hub single slot with feather keyway
- 2.3 Clamping hub single slot with spline
- 2.6 Clamping hub double slot with feather keyway
- 7.1 SPLIT hub with feather keyway
- 7.6 Half shell hub (DH) with feather keyway
- Type ZS-DKM and ZS-DKM-H with hubs corresponding to the specifications above

b) Hubs which may be used in group II, category 3 only:
(hubs without feather keyway)

- 2.0 Clamping hub single slot without feather keyway
- 2.5 Clamping hub double slot without feather keyway
- 2.8 Clamping hub with axial slot without feather keyway
- 7.0 SPLIT hub without feather keyway
- 7.5 Half shell hub (DH) without feather keyway
- Type ZS-DKM and ZS-DKM-H with hubs corresponding to the specifications above

Only valid up to size 90:
ROTEX® ZS-DKM only with spacer made of steel or aluminium wrought products with a yield stress $R_{p0.2} \geq 250$ N/mm².

Ex **Hubs, clamping hubs (SPLIT hubs) or similar types without feather keyway may be used in category 3 only and are marked with category 3 accordingly.**
The hub types 1.1 and 1.2 are not approved for potentially explosive atmospheres!

10 Enclosure A

Advice and instructions regarding the use in Ex potentially explosive atmospheres

10.1 Intended use in Ex potentially explosive atmospheres

Conditions of operation in Ex potentially explosive atmospheres

The **ROTEX®** couplings are suitable for the use according to directives 2014/34/EU and SI 2016 No. 1107.

- Protection against hazards arising from lightning must follow the lightning protection concept of the machine or plant. The relevant regulations and policy for lightning protection must be observed.
- The equipotential bonding of the couplings is made by metal contact between coupling hub and shaft. This equipotential bonding must not be affected.

1. Industry (with the exception of mining)

- Equipment group II of category 2 and 3 (*coupling is not approved/not suitable for equipment group 1*)
- Substance group G (*gases, fogs, vapours*), zone 1 and 2 (*coupling is not approved/not suitable for zone 0*)
- Substance group D (*dusts*), zone 21 and 22 (*coupling is not approved/not suitable for zone 20*)
- Explosion group IIC (*gases, fogs, vapours*) *(explosion groups IIA and IIB are included in IIC)* and explosion group IIIC (*dusts*) *(explosion groups IIIA and IIIB are included in IIIC)*

Temperature class:

Temperature class	Ambient or operating temperature T_a 1)	Max. surface temperature 2)
T4	-30 °C to +90 °C	+110 °C
T5	-30 °C to +75 °C	+95 °C
T6	-30 °C to +60 °C	+80 °C

Explanation:
The maximum surface temperatures each result from the maximum permissible ambient or operating temperature T_a plus the maximum temperature increase ΔT of 20 K to be considered. For the temperature class a safety margin subject to standard of 5 K is added.

1) The ambient or operating temperature T_a is limited to +90 °C due to the permissible permanent operating temperature of the elastomers used.
2) The maximum surface temperature of +110 °C applies for the use in locations which are potentially subject to dust explosion.

In potentially explosive atmospheres

- the ignition temperature of dusts generated must at least be 1.5 times the surface temperature to be considered
- the glow temperature must at least be the surface temperature to be considered plus a safety distance of 75 K.
- the gases and vapours generated must amount to the temperature class specified.

2. Mining

Equipment group I of category M2 (*coupling is not approved/not suitable for equipment group M1*).
Permissible ambient temperature -30 °C to +90 °C.

10 Enclosure A

Advice and instructions regarding the use in Ex potentially explosive atmospheres

10.2 Inspection intervals for couplings in Ex potentially explosive atmospheres

Equipment category	Inspection intervals
3G 3D	For couplings operated in zone 2 or zone 22 the inspection and maintenance intervals of the usual operating/assembly instructions for standard operation apply. During the standard operation which has to be taken as a basis of the ignition risk analysis the couplings are free from any ignition source. For gases, vapours and dusts generated the permissible glow and ignition temperatures specified in chapter 10.1 have to be considered and observed.
M2 2G 2D No gases and vapours of explosion group IIC	An inspection of the torsional backlash and a visual inspection of the flexible spider must be performed after 3,000 operating hours for the first time, at the latest after 6 months after start-up of the coupling. If you note insignificant or no wear on the spider upon this initial inspection, further inspections can each be performed after 6,000 operating hours or at the latest after 18 months, provided that the operating parameters remain the same. If you note significant wear during the initial inspection so that it would be recommendable to replace the spider, please find out the cause according to the table „Breakdowns“, if possible. The maintenance intervals must be adjusted to the modified operating parameters without fail.
M2 2G 2D Gases and vapours of explosion group IIC	An inspection of the torsional backlash and a visual inspection of the flexible spider must be performed after 2,000 operating hours for the first time, at the latest after 3 months after start-up of the coupling. If you note insignificant or no wear on the spider upon this initial inspection, further inspections can each be performed after 4,000 operating hours or at the latest after 12 months, provided that the operating parameters remain the same. If you note significant wear during the initial inspection so that it would be recommendable to replace the spider, please find out the cause according to the table „Breakdowns“, if possible. The maintenance intervals must be adjusted to the modified operating parameters without fail.

Ex **Hubs, clamping hubs or similar types without feather keyway may be used in category 3 only and are marked with category 3 accordingly.**

ROTEX® ZS-DKM-H coupling

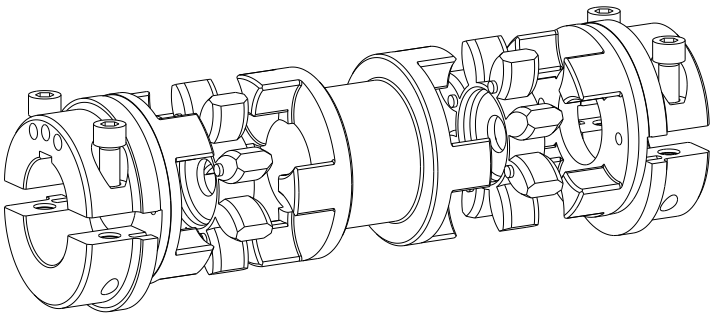

Illustration 26: ROTEX® ZS-DKM-H coupling

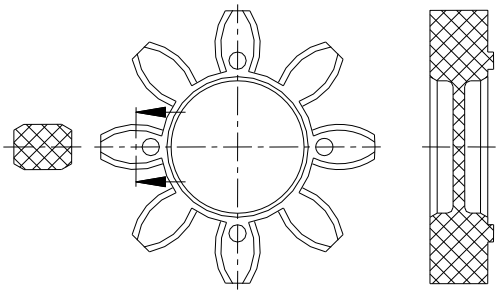

Illustration 27: ROTEX® GS spider

Here the backlash between the cams of the coupling and the flexible spider must be inspected by means of a feeler gauge.
When reaching the wear limit ***maximum friction***, the spider must be replaced immediately, irrespective of the inspection intervals.

10 Enclosure A

Advice and instructions regarding the use in Ex potentially explosive atmospheres

10.3 Standard values of wear

In case of backlash > X mm, the flexible spider must be replaced.

Monitoring of the general condition of the coupling can be done both at standstill and during operation. If the coupling is tested during operation, the operator must ensure an appropriate and proven test procedure (e. g. stroboscopic lamp, high-speed camera, etc.) which is definitely comparable to testing at standstill. If any distinctive features occur, an inspection must be made with the machine stopped.

Reaching the limits for replacing depends on the operating conditions and the existing operating parameters.

In order to ensure a long service life of the coupling and avoid hazards with the use in potentially explosive atmospheres, the shaft ends must be accurately aligned.
Please absolutely observe the displacement figures specified (see table 7 to 9). If the figures are exceeded, the coupling will be damaged.

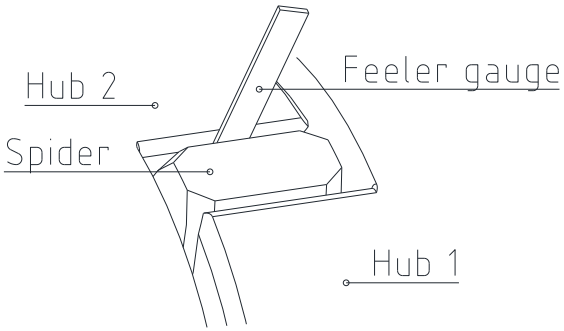

Illustration 28: Inspection of the limit of wear

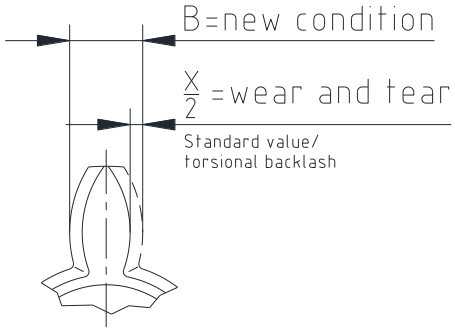

Illustration 29: Wear of spider

Table 10:

Size	Limits of wear (friction) X_{max} in mm	Size	Limits of wear (friction) X_{max} in mm
24	3	55	5
28	3	65	5
38	3	75	6
42	4	90	8
48	4	100	9

10 Enclosure A

Advice and instructions regarding the use in Ex potentially explosive atmospheres

10.4 Ex marking of coupling for potentially explosive atmospheres

The explosion protection marking of the ROTEX® coupling is applied on the outer sheath or on the front side. The flexible spider is excluded.

For the complete marking refer to the operating/assembly instructions and/or the delivery note/package.

<u>The following marking applies for the products:</u>

- Type without aluminium, with feather keyway and/or clamping ring hub (Category 2)

	I M2	Ex h	I				Mb	X
	II 2G	Ex h	IIC	T6	…	T4	Gb	X
	II 2D	Ex h	IIIC	T80 °C	…	T110 °C	Db	X
<Year>		-30 °C ≤ T_a ≤		+60 °C	…	+90 °C		

KTR Systems GmbH, Carl-Zeiss-Str. 25, D-48432 Rheine

- Type without aluminium, without feather keyway (Category 3)

	I M2	Ex h	I				Mb	X
	II 3G	Ex h	IIC	T6	…	T4	Gc	X
	II 3D	Ex h	IIIC	T80 °C	…	T110 °C	Dc	X
<Year>		-30 °C ≤ T_a ≤		+60 °C	…	+90 °C		

KTR Systems GmbH, Carl-Zeiss-Str. 25, D-48432 Rheine

- Type with aluminium, with feather keyway and/or clamping ring hub (Category 2)

	II 2G	Ex h	IIC	T6	…	T4	Gb	X
	II 2D	Ex h	IIIC	T80 °C	…	T110 °C	Db	X
<Year>		-30 °C ≤ T_a ≤		+60 °C	…	+90 °C		

KTR Systems GmbH, Carl-Zeiss-Str. 25, D-48432 Rheine

- Type with aluminium, without feather keyway (Category 3)

	II 3G	Ex h	IIC	T6	…	T4	Gc	X
	II 3D	Ex h	IIIC	T80 °C	…	T110 °C	Dc	X
<Year>		-30 °C ≤ T_a ≤		+60 °C	…	+90 °C		

KTR Systems GmbH, Carl-Zeiss-Str. 25, D-48432 Rheine

<u>Short marking:</u>
(A short marking is only made if not possible differently for reason of space or functioning.)

ROTEX®
<Year>

10 Enclosure A

Advice and instructions regarding the use in Ex potentially explosive atmospheres

10.4 Ex marking of coupling for potentially explosive atmospheres

Deviating marking applied until 31st October 2019:

Short marking: CE Ex II 2GD c IIC T X/I M2 c X

Complete marking: CE Ex II 2G c IIC T6, T5 resp. T4 -30 °C ≤ T_a ≤ +65 °C, +80 °C resp. +90 °C
(valid for PUR only) II 2D c T 110 °C/I M2 c -30 °C ≤ T_a ≤ +90 °C

Comments on marking

Equipment group I	Mining
Equipment group II	Non-mining
Equipment category 2G	Equipment ensuring a high level of safety, suitable for zone 1
Equipment category 3G	Equipment ensuring a normal level of safety, suitable for zone 2
Equipment category 2D	Equipment ensuring a high level of safety, suitable for zone 21
Equipment category 3D	Equipment ensuring a normal level of safety, suitable for zone 22
Equipment category M2	Equipment ensuring a high level of safety must be able to be switched off when an explosive atmosphere occurs
D	Dust
G	Gases and vapours
Ex h	Nonelectrical explosion protection
IIC	Gases and vapours of class IIC (including IIA and IIB)
IIIC	Electrically conductive dusts of class IIIC (including IIIA and IIIB)
T6 … T4	Temperature class to be considered, depending on the ambient temperature
T80 °C … T110 °C	Maximum surface temperature to be considered, depending on the ambient temperature
-30 °C ≤ T_a ≤ +60 °C … +90 °C or -30 °C ≤ T_a ≤ +90 °C	Permissible ambient temperature from -30 °C to +60 °C resp. -30 °C to +90 °C
Gb, Db, Mb	Equipment protection level, high level of safety, analogous to the equipment category
Gc, Dc	Equipment protection level, normal level of safety, analogous to the equipment category
X	For a safe use of the couplings particular conditions apply

If the symbol Ex was punched in addition to marking U, the coupling component was supplied by KTR as an un-bored or pilot bored version (see chapter 4.2 of the present operating/assembly instructions).

10 Enclosure A

Advice and instructions regarding the use in Ex potentially explosive atmospheres

10.5 EU Certificate of conformity

EU Declaration of Conformity resp. Certificate of Conformity

corresponding to EU directive 2014/34/EU dated 26 February 2014
and to the legal regulations adopted for its implementation

The manufacturer - KTR Systems GmbH, Carl-Zeiss-Str. 25, D-48432 Rheine - states that the

flexible ROTEX® couplings

in an explosion-proof design described in these assembly instructions are equipment resp. components corresponding to article 2, 1. of directive 2014/34/EU and comply with the general safety and health specifications according to enclosure II of directive 2014/34/EU.
This declaration of conformity is issued under the sole responsibility of the manufacturers KTR Systems GmbH.

The coupling described in here complies with the specifications of the following standards/rules:

EN ISO 80079-36:2016-12
EN ISO 80079-37:2016-12
EN ISO/IEC 80079-38:2017-10
IEC/TS 60079-32-1:2020-01-24

The ROTEX® is in accordance with the specifications of directive 2014/34/EU.

According to article 13 (1) b) ii) of directive 2014/34/EU the technical documentation is deposited with the notified body (type examination certificate IBExU13ATEXB016 X):

IBExU
Institut für Sicherheitstechnik GmbH
Identification number: 0637
Fuchsmühlenweg 7

09599 Freiberg

Rheine, Place	2021-04-26 Date	i. V. Reinhard Wibbeling Engineering/R&D	i. V. Michael Brüning Product Manager

10 Enclosure A

Advice and instructions regarding the use in Ex potentially explosive atmospheres

10.6 UK Declaration of conformity

UK Declaration of Conformity resp. Certificate of Conformity

corresponding to UK directive SI 2016 No. 1107 dated 26 February 2014
and to the legal provisions adopted for its implementation

The manufacturer - KTR Systems GmbH, Carl-Zeiss-Str. 25, D-48432 Rheine - states that the

flexible ROTEX® couplings

in an explosion-proof design described in these assembly instructions are equipment resp. components corresponding to directive SI 2016 No. 1107 and comply with the general safety and health requirements according to directive SI 2016 No. 1107.
This declaration of conformity resp. certificate of conformity is issued under the sole responsibility of the manufacturer KTR Systems GmbH.

The coupling described in here complies with the specifications of the following standards/rules:

EN ISO 80079-36:2016-12
EN ISO 80079-37:2016-12
EN ISO/IEC 80079-38:2017-10
IEC/TS 60079-32-1:2020-01-24

The ROTEX® is in accordance with the specifications respectively the applicable specifications of directive SI 2016 No. 1107.

According to directive SI 2016 No. 1107 the technical documentation is deposited with the notified body:

Eurofins CML
Identification number: 2503

Rheine, Place	2021-04-26 Date	i. V. Reinhard Wibbeling Engineering/R&D	i. V. Michael Brüning Product Manager