RADEX®-N Composite

Steel laminae coupling type

NANA 4 CFK

according to directive 2014/34/EU and UK directive SI 2016 No. 1107

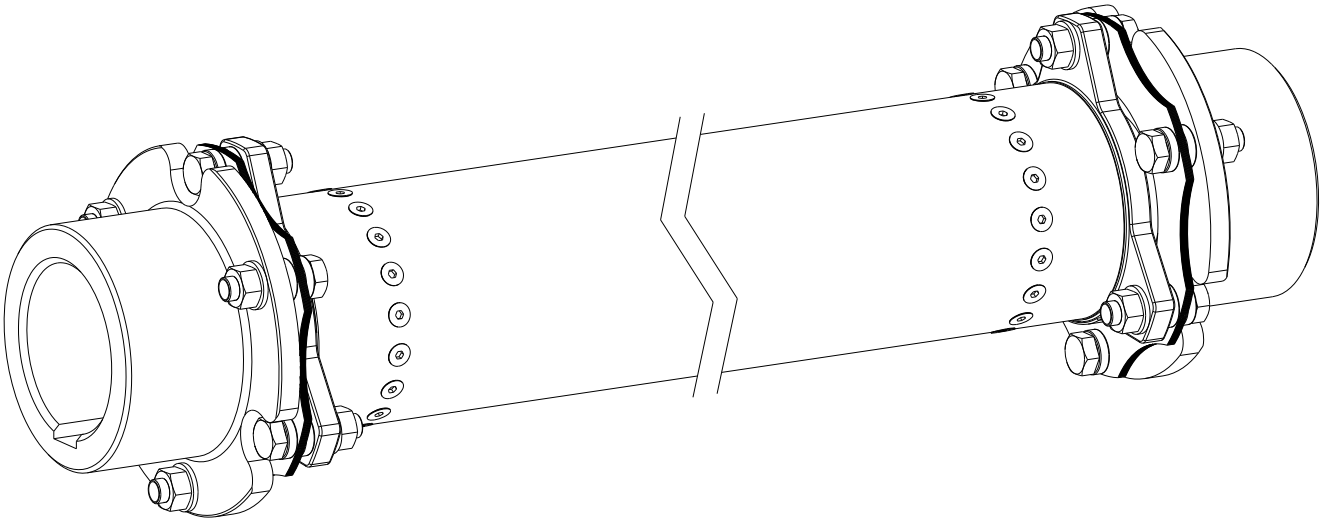

RADEX®-N is a torsionally stiff flexible steel laminae coupling. It is able to compensate for shaft misalignment, for example caused by thermal expansion, etc.

Table of contents

1 Technical data 3

2 Advice 4

2.1 General advice 4
2.2 Safety and advice symbols 4
2.3 General hazard warnings 4
2.4 Intended use 5
2.5 Coupling selection 5
2.6 Reference to EC Machinery Directive 2006/42/EC 5

3 Storage, transport and packaging 6

3.1 Storage 6
3.2 Transport and packaging 6

4 Assembly 7

4.1 Components of the couplings 7
4.2 Advice for finish bore 8
4.3 Assembly/disassembly of flange hubs 9
4.4 Assembly/Disasssembly of laminae sets 10
4.5 Displacements - alignment of the coupling 11

5 Start-up 13

6 Breakdowns, causes and elimination 14

7 Disposal 16

8 Maintenance and service 16

9 Spares inventory, customer service addresses 16

10 Enclosure A

Advice and instructions regarding the use in Ex potentially explosive atmospheres 17

10.1 Intended use in Ex potentially explosive atmospheres 17
10.2 Inspection intervals for couplings in Ex potentially explosive atmospheres 18
10.3 Ex marking of coupling for potentially explosive atmospheres 19
10.4 EU Declaration of conformity 21
10.5 UK Declaration of conformity 22

1 Technical data

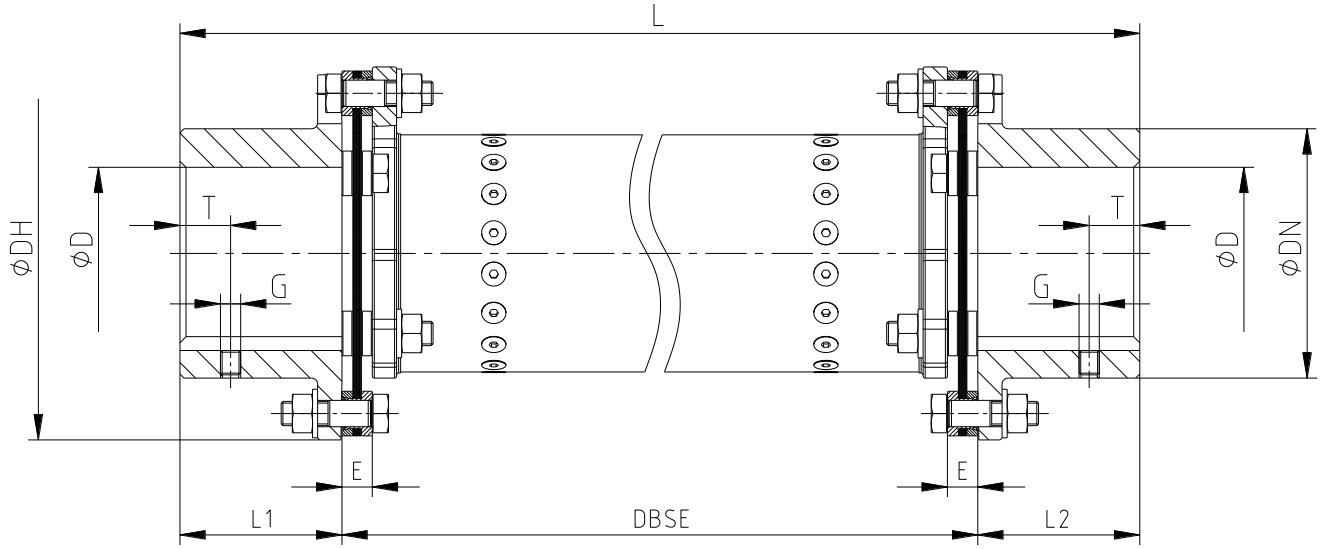

Illustration 1 RADEX®-N Composite

Table 1: Dimensions

RADEX®-N size	Max. finish bore D [mm]	Dimensions [mm]								
		General						Setscrew		
		DN	DH	L1, L2	L	E	DBSE	G	T	T_A [Nm]
70	70	102	149	65	L = L1 + L2 + DBSE	11	According to customer specification	M10	20	14
85	85	123	184	80		15		M10	25	14
90	90	135	200	80		15		M12	25	35
115	115	163	253	100		23		M12	30	35

Table 2: Coupling data

RADEX®-N size		70	85	90	115
Torque [Nm]	T_{KN}	800	1800	2500	4500
	$T_{K\,max}$	1600	3600	5000	9000
	T_{KW}	265	600	830	1500
Speed [rpm]	n	Max. speed depending on dimension DBSE - please consult with company KTR			
Operating temperature [°C]	t	-30 to +100			

Please observe maximum speed and operating temperature.

RADEX®-N couplings with attachments that can generate heat, sparks and static charging (e. g. combinations with brake drums, brake disks, overload systems such as torque limiters, fan impellers etc.) are <u>not</u> permitted for the use in potentially explosive atmospheres.
A separate analysis must be performed.

2 Advice

2.1 General advice

Read through these operating/assembly instructions carefully before you start up the coupling.
Pay special attention to the safety instructions!

The **RADEX®-N** coupling is suitable and approved for the use in potentially explosive atmospheres. When using the coupling in potentially explosive atmospheres, observe the special advice and instructions regarding safety in enclosure A.

The operating/assembly instructions are part of your product. Please store them carefully and close to the coupling. The copyright for these operating/assembly instructions remains with KTR.

2.2 Safety and advice symbols

Warning of potentially explosive atmospheres	This symbol indicates notes which may contribute to preventing bodily injuries or serious bodily injuries that may result in death caused by explosion.
Warning of personal injury	This symbol indicates notes which may contribute to preventing bodily injuries or serious bodily injuries that may result in death.
Warning of product damages	This symbol indicates notes which may contribute to preventing material or machine damage.
General advice	This symbol indicates notes which may contribute to preventing adverse results or conditions.
Warning of hot surfaces	This symbol indicates notes which may contribute to preventing burns with hot surfaces resulting in light to serious bodily injuries.

2.3 General hazard warnings

With assembly, operation and maintenance of the coupling it has to be made sure that the entire drive train is secured against accidental switch-on. You may be seriously hurt by rotating parts. Make absolutely sure to read through and observe the following safety indications.

- All operations on and with the coupling have to be performed taking into account "safety first".
- Make sure to switch off the power pack before you perform your work on the coupling.
- Secure the power pack against accidental switch-on, e. g. by providing warning signs at the place of switch-on or removing the fuse for current supply.
- Do not reach into the operating area of the coupling as long as it is in operation.
- Secure the coupling against accidental contact. Provide for the necessary protection devices and covers.

2 Advice

2.4 Intended use

You may only assemble, operate and maintain the coupling if you

- have carefully read through the operating/assembly instructions and understood them
- are technically qualified and specifically trained (e. g. safety, environment, logistics)
- are authorized by your company

The coupling may only be used in accordance with the technical data. Unauthorized modifications on the coupling design are not admissible. We will not assume liability for any damage that may arise. In the interest of further development we reserve the right for technical modifications.
The **RADEX®-N** coupling described in here corresponds to the technical status at the time of printing of these operating/assembly instructions.

2.5 Coupling selection

For a long-lasting and failure-free operation of the coupling it must be selected according to the selection instructions (according to DIN 740 part 2) for the particular application (see RADEX®-N catalogue).
If the operating conditions (performance, speed, modifications on engine and machine) change, the coupling selection must be reviewed.
Make sure that the technical data regarding torque refer to the laminae set only. The transmittable torque of the shaft-hub-connection must be reviewed by the customer and is subject to his responsibility.

If used in potentially explosive atmospheres clamping set connections and shrink fit connections (transverse interference fits) without feather key must be selected in that there is a minimum safety factor of s = 2.0 between the peak torque of the machine including all operating parameters and the frictional locking torque of the shaft-hub-connection. The responsibility for the shaft-hub-connection is subject to the customer. Please review the connection carefully.

For drives subject to torsional vibrations (drives with cyclic stress due to torsional vibrations) it is necessary to perform a torsional vibration calculation to ensure a reliable selection. Typical drives subject to torsional vibrations are e. g. drives with diesel engines, piston pumps, piston compressors etc. If requested, KTR will perform the coupling selection and the torsional vibration calculation.

2.6 Reference to EC Machinery Directive 2006/42/EC

The couplings supplied by KTR should be considered as components, not machines or partly completed machines according to EC Machinery Directive 2006/42/EC. Consequently KTR does not have to issue a declaration of incorporation. For details about safe assembly, start-up and safe operation refer to the present operating/assembly instructions considering the warnings.

3 Storage, transport and packaging

3.1 Storage

The couplings are supplied in preserved condition and can be stored in a dry and roofed place for 6 - 9 months.

Humid storage rooms are not suitable.
Make sure that condensation is not generated. The best relative air humidity is less than 65 %.

3.2 Transport and packaging

In order to avoid any injuries and any kind of damage always make use of proper transport and lifting equipment.

The couplings are packed differently each depending on size, number and kind of transport. Unless otherwise contractually agreed, packaging will follow the in-house packaging specifications of KTR.

4 Assembly

The coupling is generally supplied in individual parts. Before assembly the coupling has to be inspected for completeness.

4.1 Components of the couplings

Components of RADEX®-N Composite

Component	Quantity	Component assembly
1	2	Flange hub
2	1	Spacer with CFK pipe
2.1	2	Sealing plug
3	2	Laminae set
4	see table 3	Dowel screw
5		Spacer sleeve
6		Washer
7		Hexagon nut
8	2	Setscrew DIN EN ISO 4029

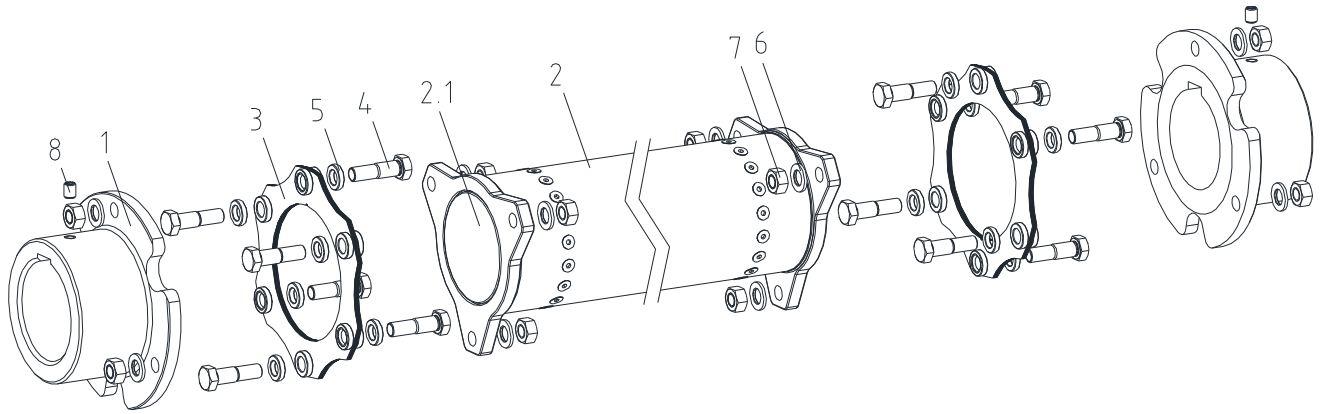

Illustration 2 RADEX®-N Composite

The sealing plugs (component 2.1) on the spacer ends (component 2) are necessary to prevent penetration of water or other foreign objects.
This is not a transport lock and must not be removed.

Table 3: Number of single parts

RADEX®-N size	70	85	90	115
Dowel screws (component 4) [1)]	6	6	6	6
Spacer sleeves (component 5) [1)]	6	-	-	-
Washers (component 6) [1)]	-	6	6	6
Hexagon nuts (component 7) [1)]	6	6	6	6

1) each laminae set

4 Assembly

4.2 Advice for finish bore

The maximum permissible bore diameters D (see chapter 1 - technical data) must not be exceeded. If these figures are disregarded, the coupling may tear. Rotating particles may cause danger to life.

- Bores of flange hubs machined by the customer have to observe concentricity resp. axial runout (see illustration 3).
- Make absolutely sure to observe the figures for ØD.
- Carefully align the flange hubs when the finish bores are drilled.
- Provide for a setscrew according to DIN EN ISO 4029 with a cup point or an end plate to fasten the flange hubs axially.

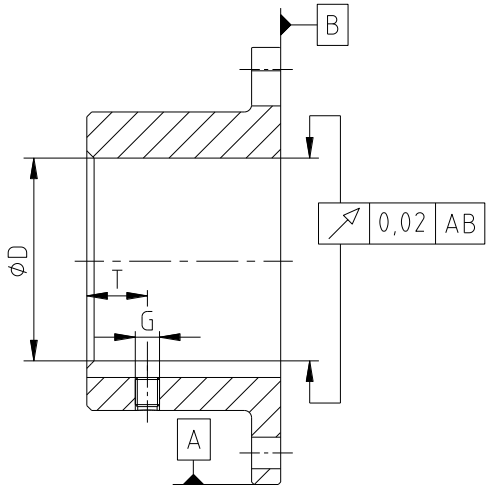

Illustration 3: Concentricity and axial runout

The customer bears the sole responsibility for all machining processes performed subsequently on unbored or pilot bored as well as finish machined coupling components and spare parts. KTR does not assume any warranty claims resulting from insufficient remachining.

KTR supplies unbored or pilot bored coupling components and spare parts only upon explicit request of the customer. These parts are additionally marked with the symbol Ⓤ.

<u>Reference to unbored resp. pilot bored coupling components with explosion protection marking:</u>
Basically the company KTR Systems GmbH supplies couplings resp. coupling hubs with explosion protection marking as an unbored or pilot bored type only on explicit request of the customer. The prerequisite is a declaration of exemption submitted by the customer assuming any responsibility and liability for respective remachining performed on the product of KTR Systems GmbH.

Table 4: Setscrew DIN EN ISO 4029

RADEX®-N size	70	85	90	115
Dimension G [mm]	M10	M10	M12	M12
Dimension T [mm]	20	25	25	30
Tightening torque T_A [Nm]	14	14	35	35

4 Assembly

4.3 Assembly/disassembly of flange hubs

We recommend to inspect bores, shaft, keyway and feather key for dimensional accuracy before assembly.

Heating the flange hubs lightly (approx. 80 °C) allows for an easier mounting onto the shafts.

Pay attention to the ignition risk in potentially explosive atmospheres!

Touching the heated flange hubs causes burns.
Please wear safety gloves.

With the assembly make sure that the distance dimension DBSE (see table 1) is observed so that the coupling components are not in contact with each other during the operation. Disregarding this advice may cause damage to the coupling.

If used in potentially explosive atmospheres the setscrews to fasten the hubs as well as all screw connections must be secured against working loose additionally, e. g. conglutinating with Loctite (average strength).

For the axial alignment of the coupling the distance dimension DBSE (see table 1) is decisive. In order to set the right DBSE dimension you should proceed as follows:

- Mount the hubs on the shaft of driving and driven side (see illustration 4).
- The internal sides of the flange hubs must be flush with the front sides of the shafts.
- Shift the power packs in axial direction until the distance dimension DBSE is achieved (see table 1).
- Fasten the flange hubs by tightening the setscrews DIN EN ISO 4029 with a cup point (see table 1 or 4).

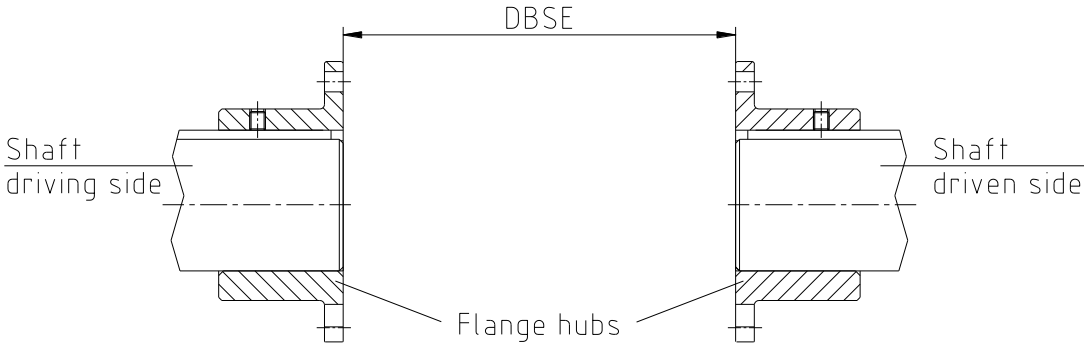

Illustration 4: Assembly of flange hubs

Disassembly:

Driving components falling down may cause injury to persons or damage on the machine. Secure the driving components during disassembly.

- Release the setscrew in the hub and unscrew it by 2 - 3 pitches.
- Pull the hub from the shaft.

4 Assembly

4.4 Assembly/Disasssembly of laminae sets

With the assembly make sure that the laminae sets are installed free from distortion in axial direction. Disregarding this advice may cause damage to the coupling.

If used in potentially explosive atmospheres the setscrews to fasten the hubs as well as all screw connections must be secured against working loose additionally, e. g. conglutinating with Loctite (average strength).

- Clean and degrease the contact surfaces of screw connections on the flange hub, laminae set and spacer.
- Insert the laminae sets and the spacer (see illustration 5 or 6).
- Hand-tighten the components first, the dowel screws to be assembled reciprocally (see illustration 5 resp. 6).
- Tighten the hexagon nuts one after the other and with several revolutions to the tightening torque specified in table 5. Secure the dowel screws against twisting.

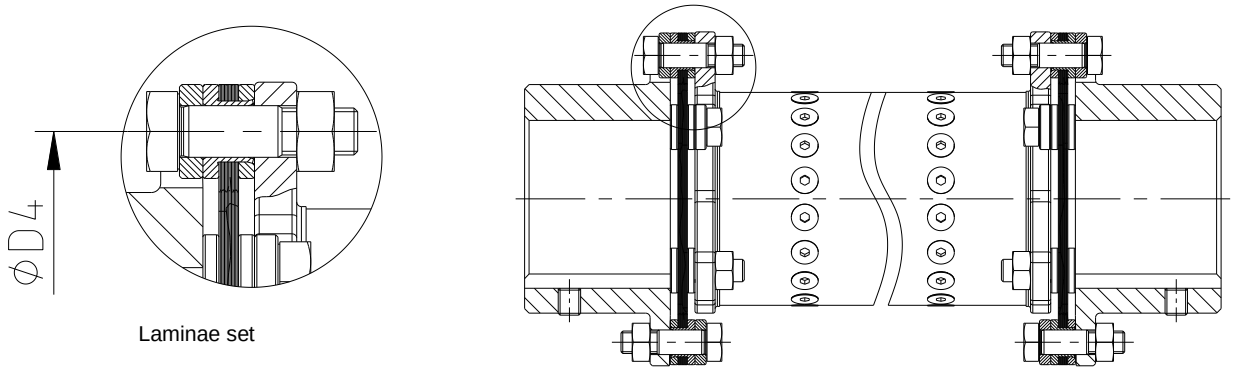

Illustration 5: Assembly of laminae sets, RADEX®-N size 70

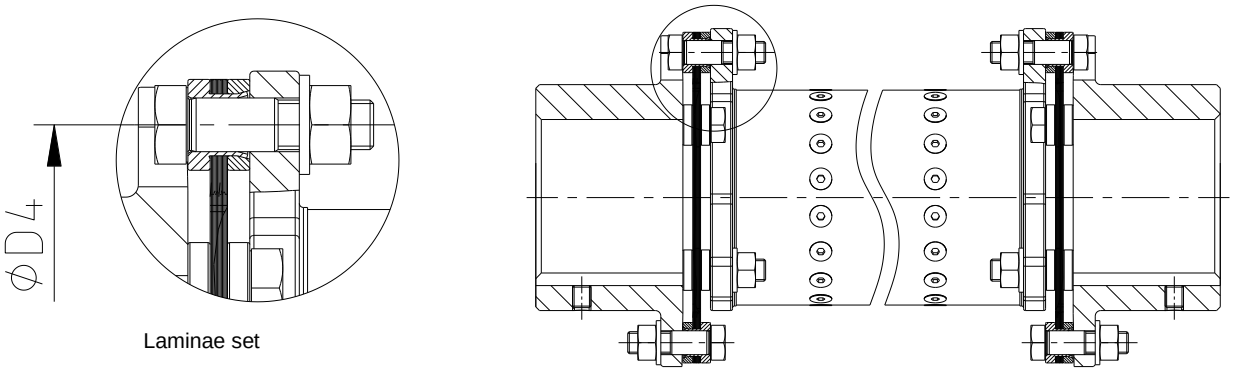

Illustration 6: Assembly of laminae sets, RADEX®-N size 85 - 115

4 Assembly

4.4 Assembly/Disasssembly of laminae sets

Table 5: Pitch circle diameter and tightening torques

RADEX®-N size	70	85	90	115
Pitch circle ØD4 [mm]	128	158	170	214
Screw size	M10	M12	M16	M20
Tightening torque T_A [Nm]	49	86	210	410

The above-mentioned tightening torques apply for the standard Composite couplings. Depending on the screw strength and material differing tightening torques may be necessary for the screw connections of the laminae sets.
That is why the tightening torques specified in the coupling description must absolutely be observed.

Having started up the coupling, the tightening torque of the dowel screws has to be inspected at regular maintenance intervals.

Disassembly:

Driving components falling down may cause injury to persons or damage on the machine. Secure the driving components before disassembly.

- Unscrew the hexagon nuts and remove along with the dowel screws and disks.
- Take out the laminae sets.

4.5 Displacements - alignment of the coupling

The displacement figures specified in table 6 provide for sufficient safety to compensate for external influences like, for example, thermal expansion or foundation settling.

In order to ensure a long service life of the coupling and avoid hazards with the use in potentially explosive atmospheres, the shaft ends must be accurately aligned.
Please absolutely observe the displacement figures specified (see table 6). If the figures are exceeded, the coupling will be damaged.
The more accurate the alignment of the coupling, the longer is its service life.
If used in potentially explosive atmospheres for explosion group IIC, only half of the displacement figures (see table 6) are permissible.

Please note:

- The displacement figures specified in table 6 are maximum figures which must not arise in parallel. If axial, radial and angular displacement arises at the same time, these values must be reduced (see illustration 8).

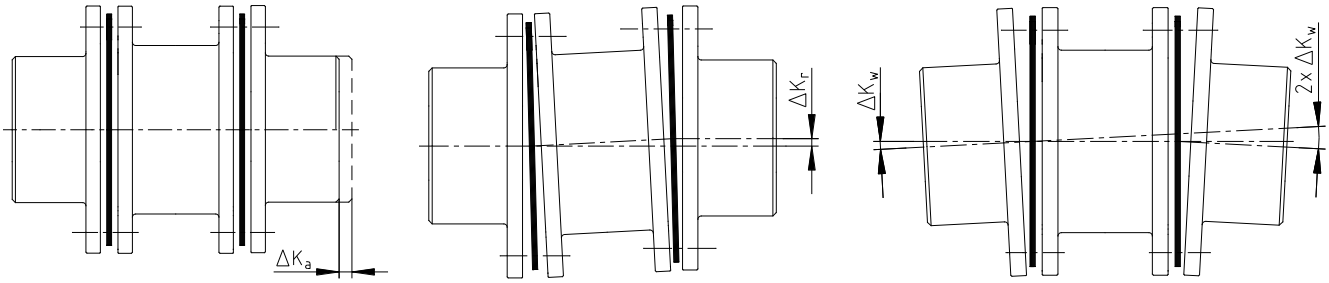

Axial displacement | Radial displacement | Angular displacement

Illustration 7: Displacements

4 Assembly

4.5 Displacements - alignment of the couplings

Examples of the displacement combinations specified in illustration 8:

Example 1:
$\Delta K_r = 10\%$
$\Delta K_w = 80\%$
$\Delta K_a = 10\%$

Example 2:
$\Delta K_r = 30\%$
$\Delta K_w = 30\%$
$\Delta K_a = 40\%$

$$\Delta K_{total} = \Delta K_a + \Delta K_r + \Delta K_w \leq 100\ \%$$

Illustration 8: Combinations of displacement

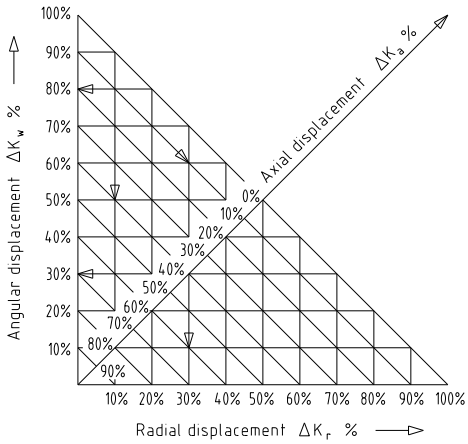

Table 6: Displacement figures

RADEX®-N size	Max. angular displacement [1] ΔK_w [°]	Max. radial displacement ΔK_r [mm]	Max. axial displacement ΔK_a [mm]
70	1.3	0.0226 x (DBSE - 11)	±2.2
85	1.3	0.0226 x (DBSE - 15)	±2.3
90	1.0	0.0174 x (DBSE - 15)	±2.0
115	1.0	0.0174 x (DBSE - 23)	±2.8

1) each laminae set

Determine the minimum and maximum distance dimension ($X_{min.}$ and $X_{max.}$) of the external flange surfaces on the finish-assembled coupling (see illustration 9) by measurements, as shown in illustration 10, at the measuring points indicated (see illustration 11). Afterwards rotate the drive train by 180° and repeat the measurements. If a value measured falls below the minimum figure or exceeds the maximum figure (see table 7), the drive or driven side should be aligned more accurately.

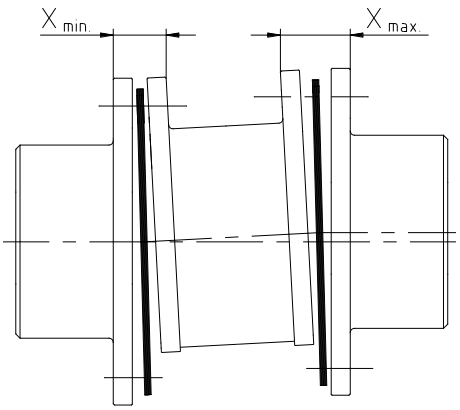

Illustration 9: Measuring of existing distance dimensions

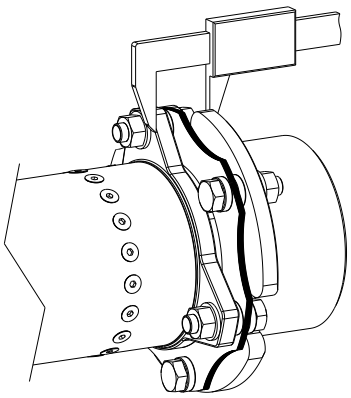

Illustration 10: Measuring process

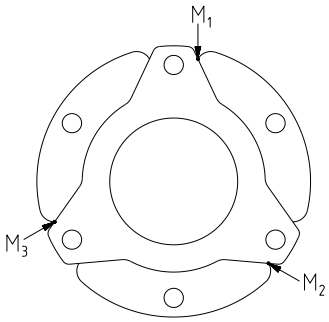

Illustration 11: Measuring points

Table 7: Limiting values for alignment

RADEX®-N size	70	85	90	115
Nominal distance dimension X [mm]	29	39	41	59
Distance dimension $X_{min.}$ [mm]	28.6	38.5	40.5	58.4
Distance dimension $X_{max.}$ [mm]	29.4	39.5	41.5	59.6

5 Start-up

Before start-up of the coupling, inspect the tightening of the setscrews in the flange hubs, the alignment and the distance dimension DBSE and adjust, if necessary, and also inspect all screw connections for the tightening torques specified.

If used in potentially explosive atmospheres the setscrews to fasten the flange hubs as well as all screw connections must be secured against working loose additionally, e. g. conglutinating with Loctite (average strength).

Finally the coupling protection against accidental contact must be fitted. It is required in accordance with DIN EN ISO 12100 (Safety of Machinery) and directives 2014/34/EU and SI 2016 No. 1107 and must protect against

- access with the little finger
- falling down of solid foreign objects.

The coupling protection is not part of KTR's scope of delivery and is the customer's responsibility. It must have sufficient distance to the rotating components to avoid contact safely. We recommend a minimum distance of 15 mm from the outside diameter DH of the coupling.

Please check if a proper enclosure (ignition protection, coupling protection, contact protection) has been mounted and the operation of the coupling is not affected by the enclosure. The same applies for test runs and rotational direction inspections.

The cover may provide for openings intended for necessary heat dissipation. These openings have to comply with DIN EN ISO 13857.
The cover must be electrically conductive and included in the equipotential bonding. Bellhousings (magnesium share below 7.5 %) made of aluminium and damping rings (NBR) can be used as connecting element between pump and electric motor. The cover may only be taken off with standstill of the unit.

If the couplings are used in locations subjected to dust explosion, the user must make sure that there is no accumulation of dust in a dangerous volume between the cover and the coupling. The coupling must not operate in an accumulation of dust.

For covers with unlocked openings on the top face no light metals must be used if the couplings are used as equipment of equipment group II (*if possible, from stainless steel*).

During operation of the coupling, please pay attention to

- different operating noise
- vibrations occurring.

If you note any irregularities with the coupling during operation, the drive unit must be switched off immediately. The cause of the breakdown must be specified by means of the table „Breakdowns“ and, if possible, be eliminated according to the proposals. The potential breakdowns specified can be hints only. To find out the cause all operating factors and machine components must be considered.

5 Start-up

Coating of coupling:

If coated (priming, paintings, etc.) couplings are used in potentially explosive atmospheres, the requirements on conductibility and coating thickness must be considered. With paintings up to 200 µm electrostatic load does not have to be expected. If thicker paintings resp. coatings up to a layer thickness of a maximum of 2.0 mm are applied, the couplings are not permissible for gases and vapours of category IIC in potentially explosive areas, but only for gases and vapours of category IIA and IIB.
This also applies for multiple coatings exceeding an overall thickness of 200 µm. Make sure with painting or coating that the coupling components are conductively connected with the device/devices to be connected so that the equipotential bonding is not impeded by the paint or coat applied. Basically painting of the laminae set and the composite spacer is not admitted to ensure an equipotential bonding.
In addition, make sure that the marking of the coupling remains legible.

6 Breakdowns, causes and elimination

The below-mentioned failures can result in improper use of the **RADEX®-N** coupling. In addition to the specifications given in these operating/assembly instructions make sure to avoid such failures.
The errors listed can only be clues to search for the failures. When searching for the failure the adjacent components must generally be considered.

The coupling can become a source of ignition by improper use.
Directive 2014/34/EU and UK directive SI 2016 No. 1107 require special care by the manufacturer and the user.

General failures with improper use:

- Important data for the coupling selection are not forwarded.
- The calculation of the shaft-hub-connection is not considered.
- Coupling components with damage occurred during transport are assembled.
- When the heated hubs are assembled, the permissible temperature is exceeded.
- The clearance of the components to be assembled is not coordinated with one another.
- Tightening torques have been fallen below/exceeded.
- Components are mixed up by mistake/assembled incorrectly.
- A wrong or no laminae set is inserted in the coupling.
- No original **KTR** components (purchased parts) are used.
- Maintenance intervals are not observed.

6 Breakdowns, causes and elimination

Breakdowns	Causes	Hazard notes for potentially explosive atmospheres	Elimination
Different operating noise and/or vibrations occuring	Misalignment	none	1) Set the unit out of operation 2) Eliminate the reason for the misalignment (e. g. loose foundation bolts, fracture of the engine mount, heat expansion of unit components, modification of the installation dimension E of the coupling) 3) For inspection of wear see chapter 10.2
	Dowel screws working loose, low micro friction under the screw head and on the steel laminae set	Ignition risk due to sparking	1) Set the unit out of operation 2) Inspect coupling components and replace coupling components that have been damaged 3) Tighten the dowel screws until the specified tightening torque is reached 4) Inspect alignment, adjust if necessary
	Screws for axial fastening of flange hubs working loose	none	1) Set the unit out of operation 2) Inspect alignment of coupling 3) Tighten the screws to fasten the flange hubs and secure against working loose 4) For inspection of wear see chapter 10.2
Fracture of steel laminae set	Fracture of steel laminae set due to high impact energy/overload	Ignition risk due to sparking	1) Set the unit out of operation 2) Disassemble the coupling and remove remainders of the steel laminae sets 3) Inspect coupling components and replace coupling components that have been damaged 4) Insert steel laminae sets, assemble coupling components 5) Find out the reason for overload
	Operating parameters do not meet with the performance of the coupling		1) Set the unit out of operation 2) Review the operating parameters and select a bigger coupling (consider mounting space) 3) Assemble new coupling size 4) Inspect alignment
	Operating error of the unit		1) Set the unit out of operation 2) Disassemble the coupling and remove remainders of the steel laminae sets 3) Inspect coupling components and replace coupling components that have been damaged 4) Insert steel laminae sets, assemble coupling components 5) Instruct and train the service staff
Cracks in/fracture of the steel laminae sets/fastening screws	Vibrations of drive		1) Set the unit out of operation 2) Disassemble the coupling and remove remainders of the steel laminae sets 3) Inspect coupling components and replace coupling components that have been damaged 4) Insert steel laminae sets, assemble coupling components 5) Inspect alignment, adjust if necessary 6) Find out the reason for vibrations

When operating with a faulty laminae set (see chapter 10.2), proper operation is not assured.

7 Disposal

In respect of environmental protection we would ask you to dispose of the packaging resp. products on termination of their service life in accordance with the legal regulations resp. standards that apply.

- **Metal**
  Any metal components have to be cleaned and disposed of by scrap metal.
- **CFRP (carbon fibre reinforced nylon)**
  Components made of CFRP have to be collected and disposed of by a waste disposal company.

8 Maintenance and service

Monitoring of the general condition of the coupling can be done both at standstill and during operation. If the coupling is tested during operation, the operator must ensure an appropriate and proven test procedure (e. g. stroboscopic lamp, high-speed camera, etc.) which is definitely comparable to testing at standstill. If any distinctive features occur, an inspection must be made with the machine stopped.

RADEX®-N is a low-maintenance coupling. We recommend to perform a visual inspection on the coupling **at least once a year**. Pay special attention to the condition of the laminae sets, alignment and screw connection of the coupling.

- Since the flexible machine bearings of the driving and driven side settle during the course of load, inspect the alignment of the coupling and re-align the coupling, if necessary.
- If some individual laminas are broken, the laminae sets of the coupling have to be replaced. The coupling components have to be inspected for damages.
- The screw connections have to be inspected visually.

With the use in potentially explosive atmospheres observe chapter 10.2 "Inspection intervals for couplings in Ex potentially explosive atmospheres".

9 Spares inventory, customer service addresses

We recommend to store major spare parts on site to ensure the readiness for use of the machine in case if a coupling fails.

Contact addresses of the KTR partners for spare parts and orders can be obtained from the KTR homepage at www.ktr.com.

☞ **KTR does not assume any liability or warranty for the use of spare parts and accessories which are not provided by KTR and for the damages which may incur as a result.**

KTR Systems GmbH
Carl-Zeiss-Str. 25
D-48432 Rheine
Phone: +49 5971 798-0
E-mail: mail@ktr.com

10 Enclosure A

Advice and instructions regarding the use in Ex potentially explosive atmospheres

Types available:

NANA 4 CFK

10.1 Intended use in Ex potentially explosive atmospheres

Conditions of operation in Ex potentially explosive atmospheres

The **RADEX®-N** couplings are suitable for the use according to directives 2014/34/EU and SI 2016 No. 1107.

- Protection against hazards arising from lightning must follow the lightning protection concept of the machine or plant. The relevant regulations and policy for lightning protection must be observed.
- The equipotential bonding of the couplings is made by metal contact between coupling hub and shaft. This equipotential bonding must not be affected.

1. Industry (with the exception of mining)

- Equipment group II of category 2 and 3 (*coupling is not approved/not suitable for equipment group 1*)
- Substance group G (*gases, fogs, vapours*), zone 1 and 2 (*coupling is not approved/not suitable for zone 0*)
- Substance group D (*dusts*), zone 21 and 22 (*coupling is not approved/not suitable for zone 20*)
- Explosion group IIC (*gases, fogs, vapours*) *(explosion groups IIA and IIB are included in IIC)* and explosion group IIIC (*dusts*) *(explosion groups IIIA and IIIB are included in IIIC)*

Temperature class:

Temperature class	Ambient or operating temperature T_a 1)	Max. surface temperature 2)
T5	-30 °C to +75 °C	+95 °C
T6	-30 °C to +60 °C	+80 °C

Explanation:
The maximum surface temperatures each result from the maximum permissible ambient or operating temperature T_a plus the maximum temperature increase ΔT of 20 K to be considered. For the temperature classes a safety margin subject to standard of 5 K is added.
1) The ambient or operating temperature T_a is limited to +75 °C due to the permissible permanent operating temperature of the CFK spacer.
2) The maximum surface temperature of +95 °C applies for the use in locations which are potentially subject to dust explosion.

In potentially explosive atmospheres

- the ignition temperature of dusts generated must at least be 1.5 times the surface temperature to be considered
- the glow temperature must at least be the surface temperature to be considered plus a safety distance of 75 K.
- the gases and vapours generated must amount to the temperature class specified.

10 Enclosure A

Advice and instructions regarding the use in Ex potentially explosive atmospheres

10.2 Inspection intervals for couplings in Ex potentially explosive atmospheres

Equipment category	Inspection intervals
3G 3D	For couplings operated in zone 2 or zone 22 the inspection and maintenance intervals of the usual operating/assembly instructions for standard operation apply. During the standard operation which has to be taken as a basis of the ignition risk analysis the couplings are free from any ignition source. For gases, vapours and dusts generated the permissible glow and ignition temperatures specified in chapter 10.1 have to be considered and observed.
2G 2D No gases and vapours of explosion group IIC	An inspection of the torsional backlash and a visual inspection of the laminae sets must be performed after 3,000 operating hours for the first time, at the latest 6 months after start-up of the coupling. If you note insignificant or no wear on the lamina sets upon this initial inspection, further inspections can each be performed after 6,000 operating hours or at the latest after 18 months, provided that the operating parameters remain the same. If you note significant wear during the initial inspection so that it would be recommendable to replace the laminae sets, find out the cause according to the table „Breakdowns“, if possible. The maintenance intervals must be adjusted to the modified operating parameters without fail.
2G 2D Gases and vapours of explosion group IIC	An inspection of the torsional backlash and a visual inspection of the laminae sets must be performed after 2,000 operating hours for the first time, at the latest 3 months after start-up of the coupling. If you note insignificant or no wear on the lamina sets upon this initial inspection, further inspections can each be performed after 4,000 operating hours or at the latest after 12 months, provided that the operating parameters remain the same. If you note significant wear during the initial inspection so that it would be recommendable to replace the laminae sets, find out the cause according to the table „Breakdowns“, if possible. The maintenance intervals must be adjusted to the modified operating parameters without fail.

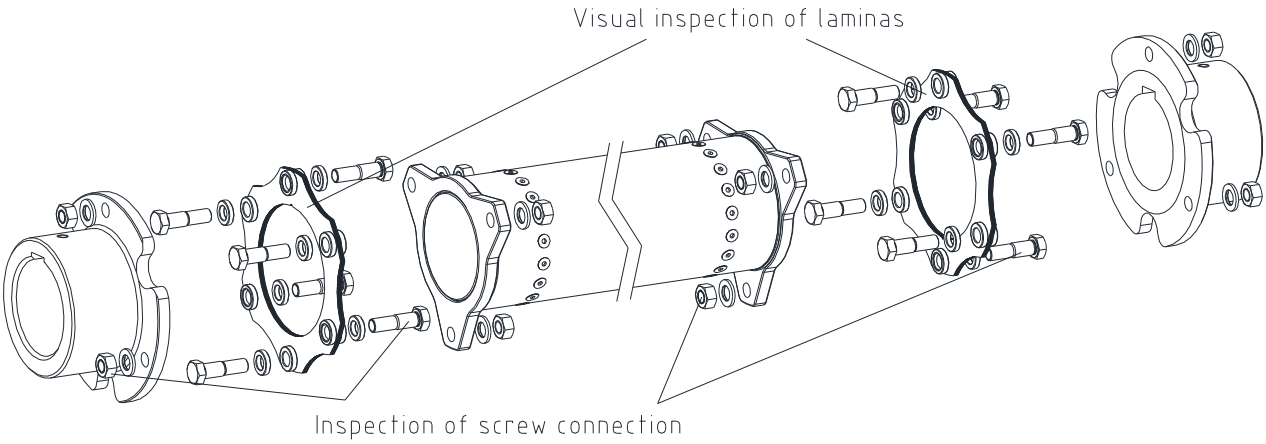

Illustration 12: RADEX®-N type NANA 4 CFK

During the visual inspection the laminae sets must be inspected for cracks and screws working loose. Screws working loose must be tightened at the screw tightening torque specified (see chapter 4.4).
Regardless of the inspection intervals those laminae sets having cracks have to be replaced by a new laminae set immediately.

10 Enclosure A

Advice and instructions regarding the use in Ex potentially explosive atmospheres

10.3 Ex marking of coupling for potentially explosive atmospheres

The explosion protection marking of the RADEX®-N coupling is applied on the outer sheath or on the front side. The laminae sets are not marked.

For the complete marking refer to the operating/assembly instructions and/or the delivery note/package.

Marking is as follows:

- Marking for unpainted res. coated or painted couplings with a layer thickness < 200 µm

Ex CE UK CA II 2G Ex h IIC T6 … T5 Gb X
II 2D Ex h IIIC T80 °C … T95 °C Db X
<Year> -30 °C ≤ T_a ≤ +60 °C … +75 °C
KTR Systems GmbH, Carl-Zeiss-Str. 25, D-48432 Rheine

- Marking for painted couplings with a layer thickness of 0.2 mm to max. 2.0 mm

Ex CE UK CA II 2G Ex h IIB T6 … T5 Gb X
II 2D Ex h IIIC T80 °C … T95 °C Db X
<Year> -30 °C ≤ T_a ≤ +60 °C … +75 °C
KTR Systems GmbH, Carl-Zeiss-Str. 25, D-48432 Rheine

Short marking:
(A short marking is only made if not possible differently for reason of space or functioning.)

RADEX®-N
<Year>

Ex CE UK CA KTR

10 Enclosure A

Advice and instructions regarding the use in Ex potentially explosive atmospheres

10.3 Ex marking of coupling for potentially explosive atmospheres

Comments on marking

Equipment group II	Non-mining
Equipment category 2G	Equipment ensuring a high level of safety, suitable for zone 1
Equipment category 2D	Equipment ensuring a high level of safety, suitable for zone 21
D	Dust
G	Gases and vapours
Ex h	Nonelectrical explosion protection
IIB	Gases and vapours of class IIB (including IIA)
IIC	Gases and vapours of class IIC (including IIA and IIB)
IIIC	Electrically conductive dusts of class IIIC (including IIIA and IIIB)
T6 … T5	Temperature class to be considered, depending on the ambient temperature
T80 °C … T95 °C	Maximum surface temperature to be considered, depending on the ambient temperature
-30 °C ≤ T_a ≤ +60 °C … +75 °C or -30 °C ≤ T_a ≤ +75 °C	Permissible ambient temperature from -30 °C to +60 °C resp. -30 °C to +75 °C
Gb, Db	Equipment protection level, analogous to the equipment category
X	For a safe use of the couplings particular conditions apply

If the symbol Ex was punched in addition to U marking, the coupling component was supplied by KTR as an unbored or pilot bored version (see chapter 4.2 of the present operating/assembly instructions).

10 Enclosure A

Advice and instructions regarding the use in Ex potentially explosive atmospheres

10.4 EU Declaration of conformity

EU Declaration of Conformity resp. Certificate of Conformity

corresponding to EU directive 2014/34/EU dated 26 February 2014
and to the legal regulations adopted for its implementation

The manufacturer - KTR Systems GmbH, Carl-Zeiss-Str. 25, D-48432 Rheine - states that the

RADEX®-N Steel Laminae Couplings

in an explosion-proof design described in these assembly instructions are equipment resp. components corresponding to article 2, 1. of directive 2014/34/EU and comply with the general safety and health specifications according to enclosure II of directive 2014/34/EU.
This declaration of conformity is issued under the sole responsibility of the manufacturers KTR Systems GmbH.

The coupling described in here complies with the specifications of the following standards/rules:

EN ISO 80079-36:2016-12
EN ISO 80079-37:2016-12
EN ISO/IEC 80079-38:2017-10
IEC/TS 60079-32-1:2020-01-24

The RADEX®-N is in accordance with the specifications of the directive 2014/34/EU.

According to article 13 (1) b) ii) of directive 2014/34/EU the technical documentation is deposited with the notified body (Deposit No. 001/22):

IBExU
Institut für Sicherheitstechnik GmbH
Identification number: 0637
Fuchsmühlenweg 7

09599 Freiberg

Rheine,	2022-07-06	i. V.	i. V.
Place	Date	Reinhard Wibbeling Engineering/R&D	Reiner Banemann Product Manager

10 Enclosure A

Advice and instructions regarding the use in Ex potentially explosive atmospheres

10.5 UK Declaration of conformity

UK Declaration of Conformity resp. Certificate of Conformity

corresponding to UK directive SI 2016 No. 1107 dated 26 February 2014
and to the legal provisions adopted for its implementation

The manufacturer - KTR Systems GmbH, Carl-Zeiss-Str. 25, D-48432 Rheine - states that the

RADEX®-N Steel Laminae Couplings

in an explosion-proof design described in these assembly instructions are equipment resp. components corresponding to directive SI 2016 No. 1107 and comply with the general safety and health requirements according to directive SI 2016 No. 1107.
This declaration of conformity resp. certificate of conformity is issued under the sole responsibility of the manufacturer KTR Systems GmbH.

The coupling described in here complies with the specifications of the following standards/rules:

EN ISO 80079-36:2016-12
EN ISO 80079-37:2016-12
EN ISO/IEC 80079-38:2017-10
IEC/TS 60079-32-1:2020-01-24

The RADEX®-N is in accordance with the specifications respectively the applicable specifications of directive SI 2016 No. 1107.

According to directive SI 2016 No. 1107 the technical documentation is deposited with the notified body:

Eurofins CML
Identification number: 2503

Rheine, Place	2022-07-06 Date	i. V. Reinhard Wibbeling Engineering/R&D	i. V. Reiner Banemann Product Manager