ROFLEX®

Flexible jaw couplings type
N and SH

according to directive 2014/34/EU and UK directive SI 2016 No. 1107

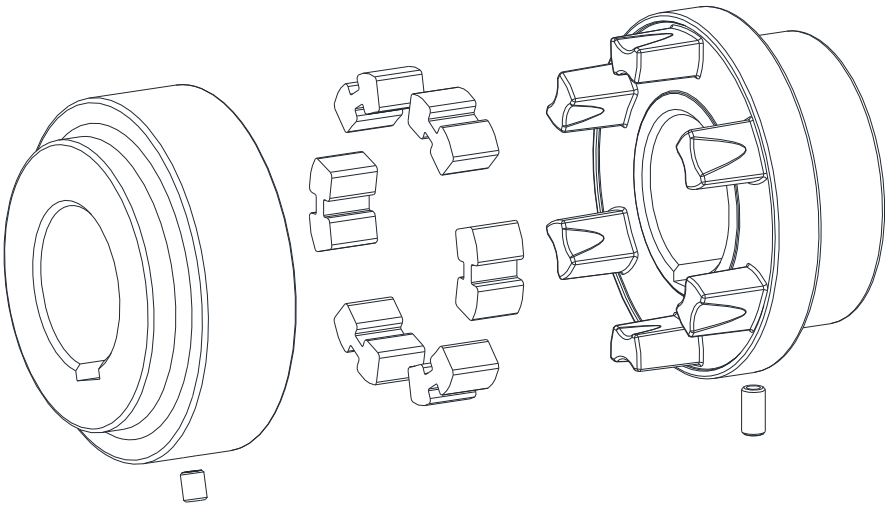

Type N

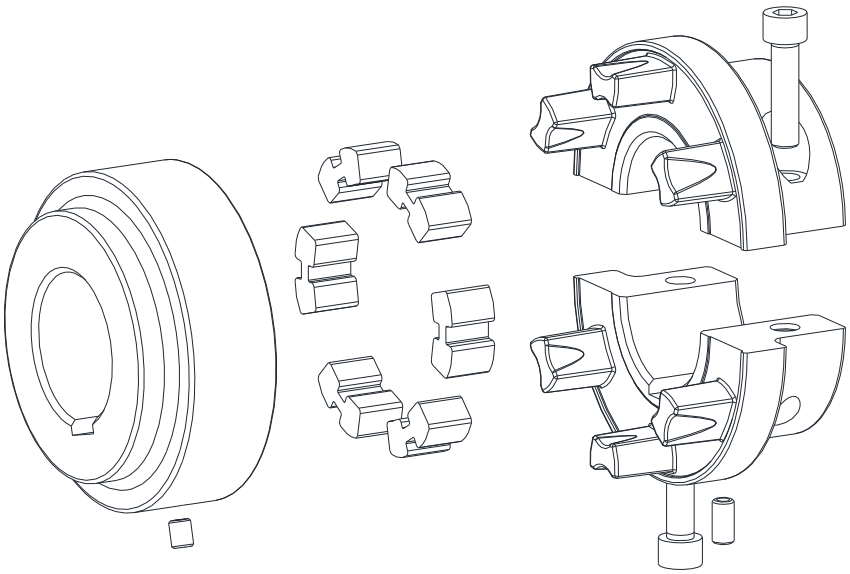

Type SH

ROFLEX® is a torsionally flexible jaw coupling. It is able to compensate for shaft misalignment, for example caused by manufacturing inaccuracies, thermal expansion, etc.

Table of contents

1 Technical data 3

2 Advice 5

2.1 General advice 5
2.2 Safety and advice symbols 5
2.3 General hazard warnings 5
2.4 Proper use 6
2.5 Coupling selection 6
2.6 Reference to EC Machinery Directive 2006/42/EC 6

3 Storage, transport and packaging 7

3.1 Storage 7
3.2 Transport and packaging 7

4 Assembly 7

4.1 Components of the coupling 7
4.2 Advice for finish bore 8
4.3 Assembly of the coupling 9
4.4 Assembly of type N 10
4.5 Assembly of type SH 10
4.6 Displacements - alignment of the coupling 11

5 Start-up 12

6 Breakdowns, causes and elimination 13

7 Disposal 15

8 Maintenance and service 16

9 Spares inventory, customer service addresses 16

10 Enclosure A Advice and instructions regarding the use in Ex potentially explosive atmospheres 17

10.1 Intended use in Ex potentially explosive atmospheres 17
10.2 Inspection intervals for couplings in Ex potentially explosive atmospheres 18
10.3 Standard values of wear 19
10.4 Ex marking of coupling for potentially explosive atmospheres 20
10.5 EU Certificate of conformity 21
10.6 UK Declaration of conformity 22

1 Technical data

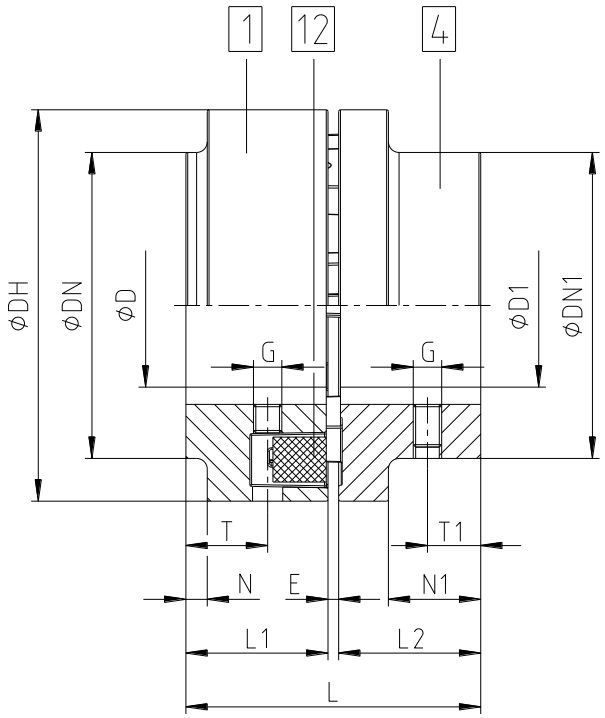

Illustration 1: ROFLEX® type N

☞ **Size 68 type N is exclusively made of sinter material!**

Table 1: Technical data and dimensions - type N

ROFLEX® type N made of cast iron and sinter material																	
Size	Torsion damper [1] (component 12) Torque in Nm		Dimensions in mm														Weight [3] in kg
			Finish bore [2]		General								Setscrew				
	T_{KN}	$T_{Kmax.}$	D	D1	L	L1, L2	E	DH	DN	DN1	N	N1	G	T	T1	T_A in Nm	
68	65	180	28	38	43	20	3	68	-	-	-	-	M5	8.5	8	2	0.6
80	80	220	35	45	63	30	3	80	-	68	-	20	M8	20.5	12	10	1.2
95	125	345	45	48	73	35	3	95	76	76	5	23	M8	22.0	15	10	1.9
110	205	565	50	55	83	40	3	110	86	86	6	26	M8	24.0	18	10	2.9
125	315	865	60	65	103	50	3	125	100	100	14	32	M8	32.0	20	10	4.5
140	450	1240	70	65	113	55	3	140	100	100	21	35	M10	13.0	22	17	5.3
160	790	2170	75	70	124	60	4	160	108	108	21	40	M10	13.0	25	17	8.1
180	1150	3160	85	80	144	70	4	180	125	125	28	50	M10	16.0	32	17	11.0
200	1800	4950	90	90	164	80	4	200	140	140	33	56	M12	20.0	40	40	16.3
225	2100	5775	100	100	184	90	4	225	150	150	38	72	M12	22.0	40	40	20.4
250	3550	9765	110	110	205.5	100	5.5	250	165	165	40	82	M16	24.0	45	80	28.2
280	5000	13750	120	120	225.5	110	5.5	280	180	180	45	90	M16	28.0	45	80	38.1

1) With size 68 only material polyurethane (PUR), from size 80 material perbunan (NBR)
2) Bores H7 with keyway DIN 6885 sheet 1 [JS9] and setscrew on the keyway, with size 68 bore H8
3) Weights apply for max. bore diameters with feather keyway according to DIN 6885 sheet 1

1 Technical data

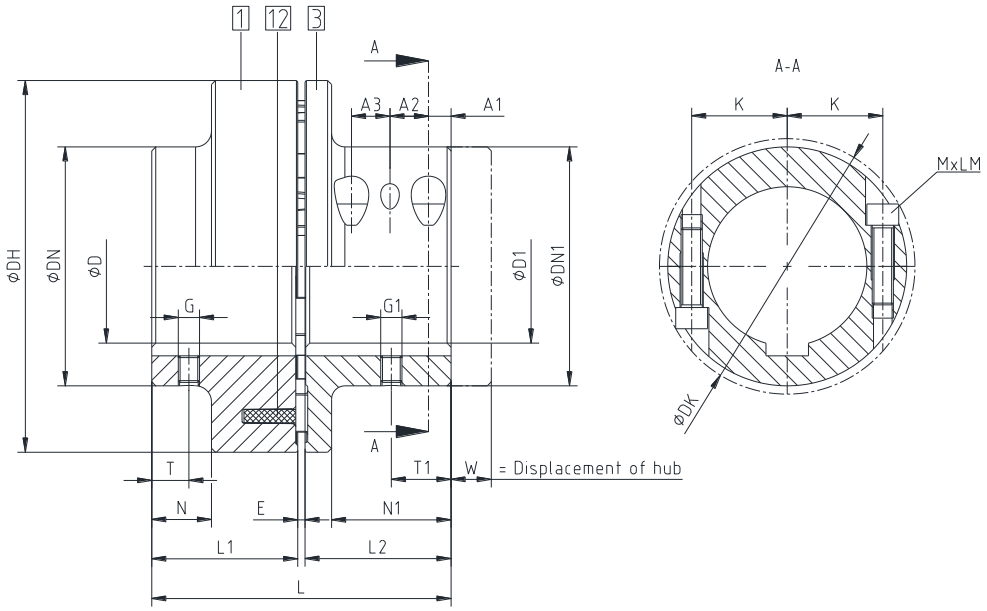

Illustration 2: ROFLEX® type SH

Table 2: Technical data and dimensions - type SH

ROFLEX® type SH made of cast iron																		
Size	Torsion damper [1] (component 12) Torque in Nm		Dimensions in mm															
			Finish bore [2]		General										Setscrew			
	T_{KN}	$T_{Kmax.}$	D	D1	L	L1	L2	E	DH	DN	DN1	N	N1	W	G	T	T1	T_A in Nm
80	80	220	35	38	63	30	30	3	80	80	68	-	20	15.5	M8	20.5	12	10
95	125	345	45	42	73	35	35	3	95	76	76	5	23	18.0	M8	22	15	10
110	205	565	50	48	83	40	40	3	110	86	86	6	26	21.0	M8	24	18	10
125	315	865	60	55	103	50	50	3	125	100	100	14	32	23.5	M8	32	20	10
140	450	1240	70	60	113	55	55	3	140	100	100	21	35	25.0	M10	13	22	17
160	790	2170	75	65	124	60	60	4	160	108	108	21	40	30.0	M10	13	25	17
180	1150	3160	85	75	144	70	70	4	180	125	125	28	50	32.0	M10	16	32	17
200	1800	4950	90	85	164	80	80	4	200	140	140	33	56	34.0	M12	20	40	40
225	2100	5775	100	90	184	90	90	4	225	150	150	38	72	39.0	M12	22	40	40
250	3550	9765	110	100	205.5	100	100	5.5	250	165	165	40	82	44.5	M16	24	40	80
280	5000	13750	120	120	225.5	110	110	5.5	280	180	180	45	90	50.0	M16	28	45	80

Table 3: Assignment of cap screws DIN EN ISO 4762 and weights

Size	DK	K	A1	A2	A3	MxLM	T_A in Nm	Weight [3] in kg
80	75	25.0	11	-	-	M8x25	34	1.3
95	82	28.5	13	-	-	M8x30	34	2.0
110	94	31.5	15	-	-	M8x35	34	3.1
125	108	38.5	20	-	-	M10x40	67	4.8
140	108	39.0	10.5	15	-	M10x35	67	5.5
160	118	42.5	12	17	-	M12x35	115	7.7
180	135	50.0	15	20	-	M12x40	115	11.2
200	153	54.0	17	23	-	M16x50	290	16.6
225	170	58.0	22	30	-	M20x50	560	21.2
250	182	63.0	25	35	-	M20x55	560	29.0
280	194	72.0	17	29	29	M16x60	290	37.6

1) Material Perbunan (NBR)
2) Bores H7 with keyway to DIN 6885 sheet 1 [JS9] and setscrew on the keyway
3) Weights apply for max. bore diameters with feather keyway according to DIN 6885 sheet 1

ROFLEX® couplings with attachments that may generate heat, sparks and static charging (e. g. combinations with brake drums, brake disks, overload systems such as torque limiters, fan impellers etc.) are <u>not</u> permitted for the use in potentially explosive atmospheres. A separate analysis must be performed.

2 Advice

2.1 General advice

Read carefully through these operating/assembly instructions before you start up the coupling.
Pay special attention to the safety instructions!

The **ROFLEX®** coupling is suitable and approved for the use in potentially explosive atmospheres. When using the coupling in potentially explosive atmospheres, observe the special advice and instructions regarding safety in enclosure A.

The operating/assembly instructions are part of your product. Please store them carefully and close to the coupling. The copyright for these operating/assembly instructions remains with KTR.

2.2 Safety and advice symbols

Warning of potentially explosive atmospheres	This symbol indicates notes which may contribute to preventing bodily injuries or serious bodily injuries that may result in death caused by explosion.
Warning of personal injury	This symbol indicates notes which may contribute to preventing bodily injuries or serious bodily injuries that may result in death.
Warning of product damages	This symbol indicates notes which may contribute to preventing material or machine damage.
General advice	This symbol indicates notes which may contribute to preventing adverse results or conditions.
Warning of hot surfaces	This symbol indicates notes which may contribute to preventing burns with hot surfaces resulting in light to serious bodily injuries.

2.3 General hazard warnings

With assembly, operation and maintenance of the coupling it has to be made sure that the entire drive train is secured against accidental switch-on. You may be seriously hurt by rotating parts. Make absolutely sure to read through and observe the following safety indications.

- All operations on and with the coupling have to be performed taking into account "safety first".
- Make sure to switch off the power pack before you perform your work on the coupling.
- Secure the power pack against accidental switch-on, e. g. by providing warning signs at the place of switch-on or removing the fuse for current supply.
- Do not reach into the operating area of the coupling as long as it is in operation.
- Secure the coupling against accidental contact. Provide for the necessary protection devices and covers.

2 Advice

2.4 Proper use

You may only assemble, operate and maintain the coupling if you

- have carefully read through the operating/assembly instructions and understood them
- are technically qualified and specifically trained (e. g. safety, environment, logistics)
- are authorized by your company

The coupling may only be used in accordance with the technical data (see chapter 1). Unauthorized modifications on the coupling design are not admissible. We will not assume liability for any damage that may arise. In the interest of further development we reserve the right for technical modifications.
The **ROFLEX®** described in here corresponds to the state of the art at the time of printing of these operating/assembly instructions.

2.5 Coupling selection

For a long-lasting and failure-free operation of the coupling it must be selected according to the selection instructions (according to DIN 740 part 2) for the particular application (see catalogue drive technology „ROFLEX®“).
If the operating conditions (performance, speed, modifications on engine and machine) change, the coupling selection must be reviewed.
Make sure that the technical data regarding torque refer to the torsion damper only. The transmittable torque of the shaft-hub-connection must be reviewed by the customer and is subject to his responsibility.

For drives subjected to torsional vibrations (drives with cyclic stress due to torsional vibrations) it is necessary to perform a torsional vibration calculation to ensure a reliable selection. Typical drives subjected to torsional vibrations are e. g. drives with diesel engines, piston pumps, piston compressors etc. If requested, KTR will perform the coupling selection and the torsional vibration calculation.

2.6 Reference to EC Machinery Directive 2006/42/EC

The couplings supplied by KTR should be considered as components, not machines or partly completed machines according to EC Machinery Directive 2006/42/EC. Consequently KTR does not have to issue a declaration of incorporation. For details about safe assembly, start-up and safe operation refer to the present operating/assembly instructions considering the warnings.

3 Storage, transport and packaging

3.1 Storage

The coupling hubs are supplied in preserved condition and can be stored in a dry and roofed place for 6 - 9 months.
The features of the torsion dampers remain unchanged for up to 5 years with favourable storage conditions.

The storage rooms must not include any ozone-generating devices like e. g. fluorescent light sources, mercury-vapour lamps or electrical high-voltage appliances.
Humid storage rooms are not suitable.
Make sure that condensation is not generated. The best relative air humidity is less than 65 %.

3.2 Transport and packaging

In order to avoid any injuries and any kind of damage always make use of proper transport and lifting equipment.

The couplings are packed differently each depending on size, number and kind of transport. Unless otherwise contractually agreed, packaging will follow the in-house packaging specifications of KTR.

4 Assembly

The coupling is generally supplied in individual parts. Before assembly the coupling has to be inspected for completeness.

4.1 Components of the coupling

Components of ROFLEX® type N

Component	Quantity	Description
1	1	Pocket section
4	1	Cam section
5	1	Setscrew DIN EN ISO 4029
6	1	Setscrew DIN EN ISO 4029
12	1	Torsion dampers (1 set)

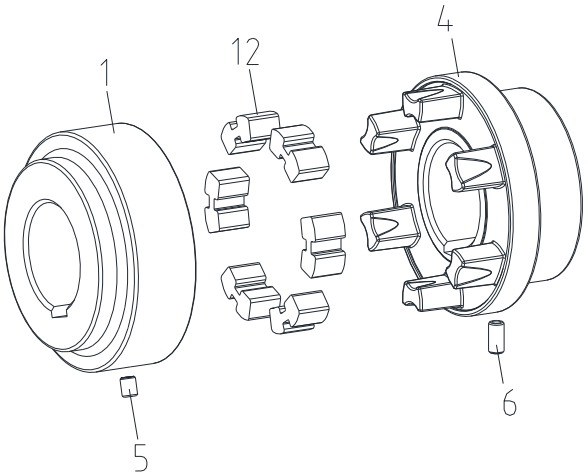

Illustration 3: ROFLEX® type N

4 Assembly

4.1 Components of the coupling

Components of ROFLEX® type SH

Component	Quantity	Description
1	1	Pocket section
3	1	Cam section SPLIT
3.1	2/4/6 1)	Cap screw DIN EN ISO 4762
5	1	Setscrew DIN EN ISO 4029
6	1	Setscrew DIN EN ISO 4029
12	1	Torsion dampers (1 set)

1) each cam section SPLIT (quantity depends on coupling size)

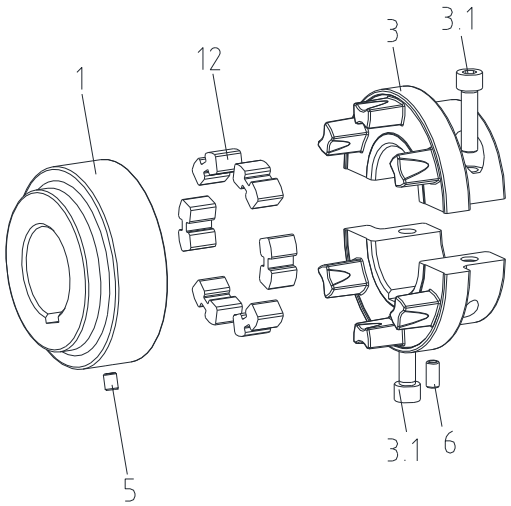

Illustration 4: ROFLEX® type SH

4.2 Advice for finish bore

STOP

The maximum permissible bore diameters D (see chapter 1 - technical data) must not be exceeded. If these figures are disregarded, the coupling may tear. Rotating particles may cause danger to life.

- Hub bores machined by the customer have to observe concentricity resp. axial runout (see illustration 5).
- Make absolutely sure to observe the figures for ØD.
- Carefully align the hubs when the finish bores are drilled.
- Provide for a setscrew according to DIN EN ISO 4029 with a cup point or an end plate to fasten the hubs axially.
  For dimensions G and T see the relevant table of the particular type (see chapter 1).

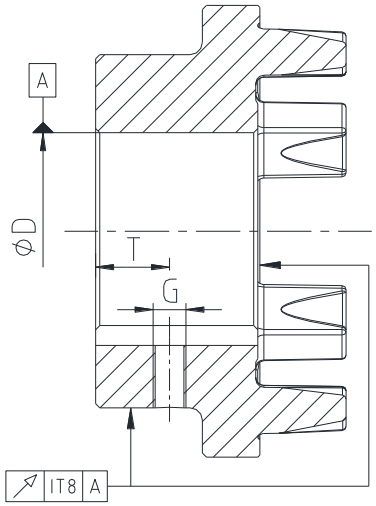

Illustration 5: Concentricity and axial runout

The customer bears the sole responsibility for all machining processes performed subsequently on unbored or pilot bored as well as finish machined coupling components and spare parts. KTR does not assume any warranty claims resulting from insufficient remachining.

4 Assembly

4.2 Advice for finish bore

KTR supplies unbored or pilot bored coupling components and spare parts only upon explicit request of the customer. These parts are additionally marked with the symbol Ⓤ.

Reference to unbored resp. pilot bored coupling components with explosion protection marking:
Basically the company KTR Systems GmbH supplies couplings resp. coupling hubs with explosion protection marking as an unbored or pilot bored type only on explicit request of the customer. The prerequisite is a declaration of exemption submitted by the customer assuming any responsibility and liability for respective remachining performed on the product of KTR Systems GmbH. According to the EX directives CE/UK unbored resp. pilot bored coupling hubs are classified as component(s). That is why KTR Systems GmbH is not in a position to provide for a CE symbol for the said components. Having drilled the coupling hubs, the customer has to perform a conformity assessment procedure.

Table 4: Recommended fit pairs acc. to DIN 748-1

Bore in mm		Shaft tolerance	Bore tolerance
above	up to		
	55	k6	H7 [1)] (KTR standard)
55		m6	

1) With size 68 the bore is provided with the tolerance H8.

If a feather keyway is intended to be used in the hub, it should correspond to the tolerance ISO JS9 (KTR standard) with normal operating conditions or ISO P9 with difficult operating conditions (frequently alternating torsional direction, shock loads, etc.). The keyway should preferably be located between the cams. With axial fastening by the setscrew the tapped hole should be located on the keyway.

The transmittable torque of the shaft-hub-connection must be reviewed by the customer and is subject to his responsibility.

4.3 Assembly of the coupling

We recommend to inspect bores, shaft, keyway and feather key for dimensional accuracy before assembly.

Heating the hubs, coupling flanges or flange hubs lightly (approx. 80 °C) allows for an easier mounting on the shaft.

Pay attention to the ignition risk in potentially explosive atmospheres!

Touching the heated hubs causes burns.
Please wear safety gloves.

With assembly make sure that the dimension E respectively L (see table 1 and 2 of the particular types) is observed so that the hubs are not in contact with each other during the operation.
Disregarding this advice may cause damage to the coupling.

If used in potentially explosive atmospheres the setscrews to fasten the hubs as well as all screw connections must be secured against working loose additionally, e. g. conglutinating with Loctite (average strength).

4 Assembly

4.4 Assembly of type N

- Mount the cam and pocket section on the shaft of the driving and driven side (see illustration 6).
- Insert the torsion dampers in the pocket section (see illustration 7).
- Shift the power packs in axial direction until the distance dimension E has been achieved (see illustration 8).
- If the power packs have already been firmly assembled, shifting the cam or pocket section axially on the shafts allows for adjusting the dimension E (see illustration 8).
- Fasten the cam and pocket section by tightening the setscrews DIN EN ISO 4029 with a cup point (tightening torque see table 1).

☞ **Make sure to tighten the setscrew of the pocket section before you push the cam section in the pocket section.**

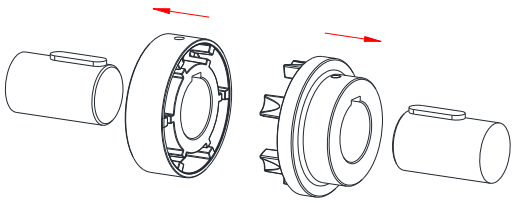

Illustration 6: Assembly of hubs

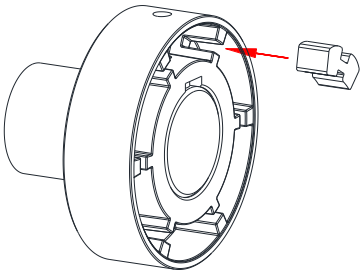

Illustration 7: Assembly of torsion dampers

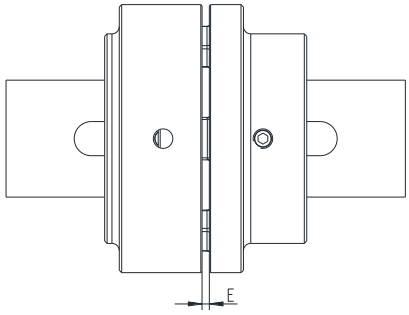

Illustration 8: Assembly of coupling

4.5 Assembly of type SH

- Mount the pocket section on the shaft of the driven side (see illustration 6).
- Insert the torsion dampers in the pocket section (see illustration 7).
- Remove the cap screws from the cam section SPLIT.

☞ **If the half shells cannot be separated from each other, the separation process must be initiated via a suitable tool (mounting hammer).**

- Place the upper half shell of the cam section with the inserted cap screw on the shaft (see illustration 9).
- Align the lower half shell of the cam section with the inserted cap screw to the upper half shell under the shaft (see illustration 10). Screw in the cap screws through several pitches.
- Align the upper and lower half shell based on the outer shape so that the fracture surfaces fit exactly.
- Hand-tighten the cap screws.
- Shift the power packs in axial direction until the distance dimension E has been achieved (see illustration 11).
- If the power packs have already been firmly assembled, shifting the cam section SPLIT respectively pocket section axially on the shafts allows for adjusting the dimension E (see illustration 11).
- Tighten the cap screws of the cam section SPLIT reciprocally by means of a suitable torque key to the tightening torques T_A specified in table 3.

4 Assembly

4.5 Assembly of type SH

- Fasten the cam section SPLIT and pocket section by tightening the setscrews DIN EN ISO 4029 with a cup point (tightening torque see table 2).

☞ **Make sure to tighten the setscrew of the pocket section before you push the cam section SPLIT in the pocket section.**

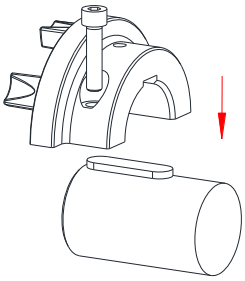

Illustration 9

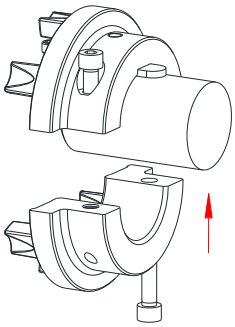

Illustration 10

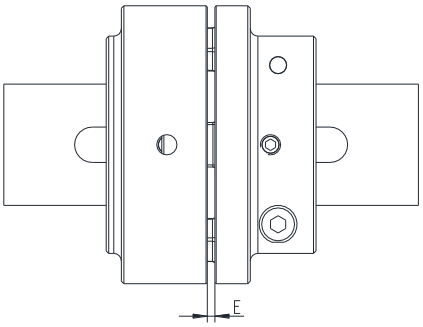

Illustration 11: Assembly of coupling

⚠ **Having started up the coupling, the wear of the torsion dampers has to be inspected at regular maintenance intervals and the torsion dampers has to be replaced, if necessary.**

4.6 Displacements - alignment of the coupling

The **ROFLEX®** compensates for displacements generated by the shafts to be combined as shown in table 5. Excessive misalignment may be generated by inaccurate alignment, production tolerances, thermal expansion, shaft deflection, twisting of machine frames, etc.

⚠ **In order to ensure a long service life of the coupling and avoid hazards with the use in potentially explosive atmospheres, the shaft ends must be accurately aligned.**
Please absolutely observe the displacement figures specified (see table 5).
If the figures are exceeded, the coupling will be damaged.
The more accurate the alignment of the coupling, the longer is its service life.
If used in potentially explosive atmospheres for explosion group IIC, only half of the displacement figures (see table 5) are permissible.

<u>Please note:</u>

- Inspect with a dial gauge, ruler or feeler gauge whether the permissible displacement figures specified in table 5 are observed.

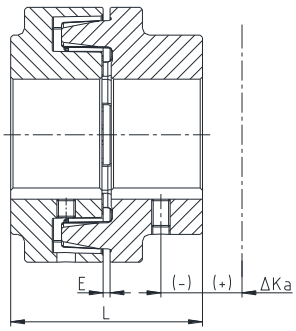

Axial displacements

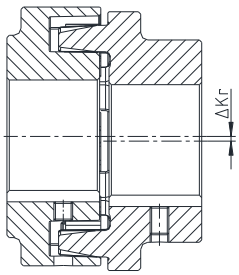

Radial displacements

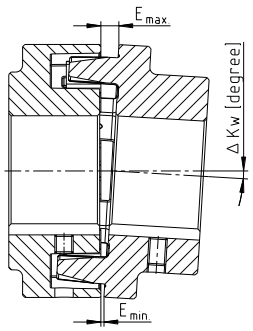

Angular displacements

$L_{adm.} = L + \Delta K_a$ in mm

Illustration 12: Displacements

$\Delta K_w = E_{max.} - E_{min.}$ in mm

Radial and angular displacement must not arise simultaneously.

4 Assembly

4.6 Displacements - alignment of the coupling

Table 5: Displacement figures

Size		68	80	95	110	125	140	160	180	200	225	250	280
Max. axial displacement ΔK_a in mm		±1.00	±1.00	±1.00	±1.25	±1.25	±1.25	±1.75	±1.75	±1.75	±2.50	±2.75	±2.75
Max. radial displacement ΔKr in mm with n=	1500 rpm	0.20	0.23	0.23	0.25	0.28	0.30	0.35	0.35	0.38	0.43	0.48	0.50
	3000 rpm	0.14	0.16	0.16	0.18	0.20	0.21	0.25	0.25	0.27	0.30	0.34	0.36
Max. angular displacement ΔK_w in mm with n =	1500 rpm (1 degree)	0.20	0.23	0.30	0.25	0.28	0.30	0.35	0.35	0.38	0.43	0.48	0.50
	3000 rpm (0.5 degree)	0.14	0.16	0.16	0.18	0.20	0.21	0.25	0.25	0.27	0.30	0.34	0.36

5 Start-up

Before start-up of the coupling, inspect the tightening of the setscrews in the hubs, the alignment and the distance dimension E and adjust, if necessary, and also inspect all screw connections for the tightening torques specified.

If used in potentially explosive atmospheres the setscrews to fasten the hubs as well as all screw connections must be secured against working loose additionally, e. g. conglutinating with Loctite (average strength).

Finally the coupling protection against accidental contact must be fitted. It is required in accordance with DIN EN ISO 12100 (Safety of Machinery) and directives 2014/34/EU and SI 2016 No. 1107 and must protect against

- access with a little finger
- falling down of solid foreign objects.

The coupling protection is not part of KTR's scope of delivery and is the customer's responsibility. It must have sufficient distance to the rotating components to safely avoid contact. Depending on the outside diameter DH of the coupling, we recommend the following minimum distance:
ØDH to 50 mm = 6 mm, ØDH 50 mm to 120 mm = 10 mm, ØDH from 120 mm = 15 mm.

Please check if a proper enclosure (ignition protection, coupling protection, contact protection) has been mounted and the operation of the coupling is not affected by the enclosure. The same applies for test runs and rotational direction inspections.

The cover may provide for openings intended for necessary heat dissipation. These openings have to comply with DIN EN ISO 13857.

If the couplings are used in locations subject to dust explosion and in mining the user must make sure that there is no accumulation of dust <u>in a dangerous volume</u> between the cover and the coupling. The coupling must not operate in an accumulation of dust.

For covers with unlocked openings on the top face no light metals must be used if the couplings are used as equipment of equipment group II (*if possible, from stainless steel*).
If the couplings are used in mining (equipment group I M2), the cover must not be made of light metal. In addition, it must be resistant to higher mechanical loads than with use as equipment of equipment group II.

During operation of the coupling, please pay attention to

- different operating noise
- vibrations occurring.

5 Start-up

If you note any irregularities with the coupling during operation, the drive unit must be switched off immediately. The cause of the breakdown must be specified by means of the table „Breakdowns“ and, if possible, be eliminated according to the proposals. The potential breakdowns specified can be hints only. To find out the cause all operating factors and machine components must be considered.

Coating of coupling:

If coated (priming, paintings, etc.) couplings are used in potentially explosive atmospheres, the requirements on conductibility and coating thickness must be considered. With paintings up to 200 µm electrostatic load does not have to be expected. If thicker paintings resp. coatings up to a layer thickness of a maximum of 2.0 mm are applied, the couplings are not permissible for gases and vapours of category IIC in potentially explosive areas, but only for gases and vapours of category IIA and IIB.
This also applies for multiple coatings exceeding an overall thickness of 200 µm. Make sure with painting or coating that the coupling components are conductively connected with the device/devices to be connected so that the equipotential bonding is not impeded by the paint or coat applied. Basically painting of the torsion dampers is not admitted to ensure an equipotential bonding.
In addition, make sure that the marking of the coupling remains legible.

6 Breakdowns, causes and elimination

The failures specified below can lead to an improper use of the **ROFLEX®** coupling. In addition to the specifications given in these operating/assembly instructions make sure to avoid such failures.
The errors listed can only be clues to search for the failures. When searching for the failure the adjacent components must generally be considered.

The coupling can become a source of ignition with improper use.
Directive 2014/34/EU and UK directive SI 2016 No. 1107 require special care by the manufacturer and the user.

General failures with improper use:

- Important data for the coupling selection are not forwarded.
- The calculation of the shaft-hub-connection is not considered.
- Coupling components with damage occurred during transport are assembled.
- If the heated hubs are assembled, the permissible temperature is exceeded.
- The clearance of the components to be assembled is not coordinated with one another.
- Tightening torques are fallen below/exceeded.
- Components are mixed up by mistake/assembled incorrectly.
- A wrong torsion damper is inserted in the coupling.
- No original **KTR** components (purchased parts) are used.
- Old/already worn out torsion dampers or torsion dampers stored for too long are used.
- Maintenance intervals are not observed.

6 Breakdowns, causes and elimination

Breakdowns	Causes	Hazard notes for potentially explosive atmospheres	Elimination
Different operating noise and/or vibrations occuring	Misalignment		1) Set the unit out of operation 2) Eliminate the reason for the misalignment (e. g. loose foundation bolts, fracture of the engine mount, heat expansion of unit components, modification of the installation dimension E of the coupling) 3) For inspection of wear see chapter 10.2
	Wear of torsion damper, short-term torque transmission due to metal contact	Ignition risk due to sparking	1) Set the unit out of operation 2) Disassemble the coupling and remove residues of the torsion damper 3) Inspect coupling components and replace coupling components that have been damaged 4) Insert torsion damper, assemble coupling components 5) Inspect alignment, adjust if necessary
	Screws for axial fastening of hubs working loose		1) Set the unit out of operation 2) Inspect alignment of coupling 3) Tighten the screws to fasten the hubs and secure against working loose 4) For inspection of wear see chapter 10.2
Breaking of cams	Wear of torsion damper, torque transmission by metal contact		1) Set the unit out of operation 2) Replace complete coupling 3) Inspect alignment
	Breaking of the cams due to high impact energy/overload		1) Set the unit out of operation 2) Replace complete coupling 3) Inspect alignment 4) Find out the reason for overload
	Operating parameters do not meet with the performance of the coupling		1) Set the unit out of operation 2) Review the operating parameters and select a bigger coupling (consider mounting space) 3) Assemble new coupling size 4) Inspect alignment
	Operating error of the unit		1) Set the unit out of operation 2) Replace complete coupling 3) Inspect alignment 4) Instruct and train the service staff
Premature wear of torsion damper	Misalignment		1) Set the unit out of operation 2) Eliminate the reason for the misalignment (e. g. loose foundation bolts, fracture of the engine mount, heat expansion of unit components, modification of the installation dimension E of the coupling) 3) For inspection of wear see chapter 10.2
	e. g. contact with aggressive liquids/oils, ozone influence, too high/low ambient temperature etc. causing physical modification of the torsion damper	Ignition risk due to sparking with metallic contact of the cams	1) Set the unit out of operation 2) Disassemble the coupling and remove residues of the torsion damper 3) Inspect coupling components and replace coupling components that have been damaged 4) Insert torsion damper, assemble coupling components 5) Inspect alignment, adjust if necessary 6) Make sure that further physical modifications of the torsion damper are excluded

6 Breakdowns, causes and elimination

Breakdowns	Causes	Hazard notes for potentially explosive atmospheres	Elimination
Premature wear of torsion damper	Ambient/contact temperatures which are too high for the torsion damper, max. permissible -30 °C/+75 °C	Ignition risk due to sparking with metallic contact of the cams	1) Set the unit out of operation 2) Disassemble the coupling and remove residues of the torsion damper 3) Inspect coupling components and replace coupling components that have been damaged 4) Insert torsion damper, assemble coupling components 5) Inspect alignment, adjust if necessary 6) Inspect and adjust ambient/contact temperature
Premature wear of torsion damper (hardening/embrittlement of torsion damper cam)	Vibrations of drive		1) Set the unit out of operation 2) Disassemble the coupling and remove residues of the torsion damper 3) Inspect coupling components and replace coupling components that have been damaged 4) Insert torsion damper, assemble coupling components 5) Inspect alignment, adjust if necessary 6) Find out the reason for vibrations

When operating with a worn torsion damper (see chapter 10.3) proper operation is not ensured.

7 Disposal

In respect of environmental protection we would ask you to dispose of the packaging resp. products on termination of their service life in accordance with the legal regulations resp. standards that apply.

- **Metal**
  Any metal components have to be cleaned and disposed of by scrap metal.
- **Nylon materials**
  Nylon materials have to be collected and disposed of by a waste disposal company.

8 Maintenance and service

ROFLEX® is a low-maintenance coupling. We recommend to perform a visual inspection on the coupling **at least once a year**. Please pay special attention to the condition of the torsion dampers of the coupling.

- Since the flexible machine bearings of the driving and driven side settle during the course of load, inspect the alignment of the coupling and re-align the coupling, if necessary.
- The coupling components have to be inspected for damages.
- The screw connections have to be visually inspected.

With the use in potentially explosive atmospheres observe chapter 10.2 "Inspection intervals for couplings in Ex potentially explosive atmospheres".

9 Spares inventory, customer service addresses

We recommend to store major spare parts on site to ensure the readiness for use of the machine in case if a coupling fails.

Contact addresses of the KTR partners for spare parts and orders can be obtained from the KTR homepage at www.ktr.com.

KTR does not assume any liability or warranty for the use of spare parts and accessories which are not provided by KTR and for the damages which may incur as a result.

KTR Systems GmbH
Carl-Zeiss-Str. 25
D-48432 Rheine
Phone: +49 5971 798-0
E-mail: mail@ktr.com

10 Enclosure A

Advice and instructions regarding the use in Ex potentially explosive atmospheres

Types available:

N and SH with a positive-locking shaft-hub-connection (feather keyway or taper clamping sleeve)

10.1 Intended use in Ex potentially explosive atmospheres

Conditions of operation in Ex potentially explosive atmospheres

The **ROFLEX®** couplings are suitable for the use according to directives 2014/34/EU and SI 2016 No. 1107.

- Protection against hazards arising from lightning must follow the lightning protection concept of the machine or plant. The relevant regulations and policy for lightning protection must be observed.
- The equipotential bonding of the couplings is made by metal contact between coupling hub and shaft. This equipotential bonding must not be affected.

1. Industry (with the exception of mining)

- Equipment group II of category 2 and 3 (*coupling is not approved/not suitable for equipment group 1*)
- Substance group G (*gases, fogs, vapours*), zone 1 and 2 (*coupling is not approved/not suitable for zone 0*)
- Substance group D (*dusts*), zone 21 and 22 (*coupling is not approved/not suitable for zone 20*)
- Explosion group IIC (*gases, fogs, vapours*) *(explosion groups IIA and IIB are included in IIC)* and explosion group IIIC (*dusts*) *(explosion groups IIIA and IIIB are included in IIIC)*

Temperature class:

Temperature class	Ambient or operating temperature T_a 1)	Max. surface temperature 2)
T5	-30 °C to +75 °C	+95 °C
T6	-30 °C to +60 °C	+80 °C

Explanation:
The maximum surface temperatures each result from the maximum permissible ambient or operating temperature T_a plus the maximum temperature increase ΔT of 20 K to be considered. For the temperature class a safety margin subject to standard of 5 K is added.
1) The ambient or operating temperature T_a is limited to +75 °C due to the permissible permanent operating temperature of the torsion dampers used.
2) The maximum surface temperature of +95 °C applies for the use in locations which are potentially subject to dust explosion.

In potentially explosive atmospheres
- the ignition temperature of dusts generated must at least be 1.5 times the surface temperature to be considered
- the glow temperature must at least be the surface temperature to be considered plus a safety distance of 75 K.
- the gases and vapours generated must amount to the temperature class specified.

2. Mining

Equipment group I of category M2 (*coupling is not approved/not suitable for equipment group M1*).
Permissible ambient temperature -30 °C to +75 °C.

10 Enclosure A

Advice and instructions regarding the use in Ex potentially explosive atmospheres

10.2 Inspection intervals for couplings in Ex potentially explosive atmospheres

Equipment category	Inspection intervals
M2 2G 2D No gases and vapours of explosion group IIC	An inspection of the torsional backlash and a visual inspection of the torsion damper must be performed after 3,000 operating hours for the first time, at the latest after 6 months after start-up of the coupling. If you note insignificant or no wear on the torsion damper upon this initial inspection, further inspections can each be performed after 6,000 operating hours or at the latest after 18 months, provided that the operating parameters remain the same. If you note significant wear with the initial inspection so that it would be advisable to replace the torsion damper, please find out the cause according to the table „Breakdowns“, if possible. The maintenance intervals must be adjusted to the modified operating parameters without fail.
2G 2D Gases and vapours of explosion group IIC	An inspection of the torsional backlash and a visual inspection of the torsion damper must be performed after 2,000 operating hours for the first time, at the latest after 3 months after start-up of the coupling. If you note insignificant or no wear on the torsion damper upon this initial inspection, further inspections can each be performed after 4,000 operating hours or at the latest after 12 months, provided that the operating parameters remain the same. If you note significant wear with the initial inspection so that it would be advisable to replace the torsion damper, please find out the cause according to the table „Breakdowns“, if possible. The maintenance intervals must be adjusted to the modified operating parameters without fail.

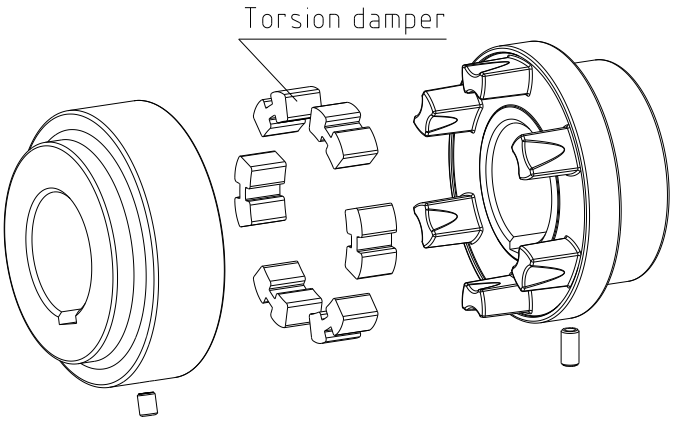

Illustration 13: ROFLEX® type N

Inspection of torsional backlash

Here the backlash between the coupling cams and the torsion damper teeth must be inspected by means of reversing backlash.
When reaching the limit of wear and tear $\Delta s_{max.}$, the torsion dampers must be replaced immediately, irrespective of the inspection intervals.

10 Enclosure A

Advice and instructions regarding the use in Ex potentially explosive atmospheres

10.3 Standard values of wear

Reaching the limits for replacing depends on the operating conditions and the existing operating parameters.

With a torsional backlash ≥ $\Delta s_{max.}$ in mm the torsion dampers need to be replaced.

In order to ensure a long service life of the coupling and avoid hazards with the use in potentially explosive atmospheres, the shaft ends must be accurately aligned.
Please absolutely observe the displacement figures specified (see table 5). If the figures are exceeded, the coupling will be damaged.

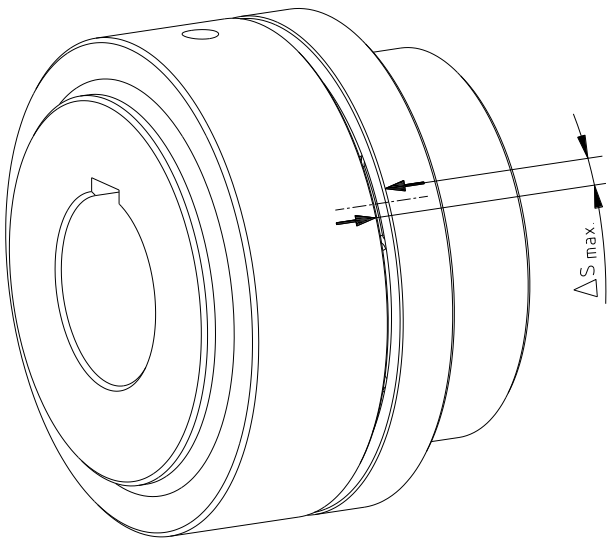

Illustration 14: Inspection of the limit of wear

Table 6:

Size	68	80	95	110	125	140	160	180	200	225	250	280
Torsional backlash $\Delta S_{max.}$ in mm	5.0	4.5	6.0	6.5	7.5	8.5	8.0	7.5	8.0	9.0	9.5	11.0

10 Enclosure A

Advice and instructions regarding the use in Ex potentially explosive atmospheres

10.4 Ex marking of coupling for potentially explosive atmospheres

The explosion protection marking of the ROFLEX® coupling is applied on the outer sheath or on the front side. The torsion damper is not marked.

For the complete marking refer to the operating/assembly instructions and/or the delivery note/package.

Marking for gas and dust is as follows:

Ex CE UKCA II 2G Ex h IIC T6 … T5 Gb X
II 2D Ex h IIIC T80 °C … T95 °C Db X
<Year> -30 °C ≤ T_a ≤ +60 °C … +75 °C
KTR Systems GmbH, Carl-Zeiss-Str. 25, D-48432 Rheine

Marking for mining is as follows:

Ex CE UKCA I M2 Ex h I Mb X
<Year> -30 °C ≤ T_a ≤ +75 °C
KTR Systems GmbH, Carl-Zeiss-Str. 25, D-48432 Rheine

Short marking:
(A short marking is only made if not possible differently for reason of space or functioning.)

ROFLEX®
<Year>

Ex CE UKCA KTR

Comments on marking

Equipment group I	Mining
Equipment group II	Non-mining
Equipment category 2G	Equipment ensuring a high level of safety, suitable for zone 1
Equipment category 2D	Equipment ensuring a high level of safety, suitable for zone 21
Equipment category M2	Equipment ensuring a high level of safety must be able to be switched off when an explosive atmosphere occurs
D	Dust
G	Gases and vapours
Ex h	Nonelectrical explosion protection
IIC	Gases and vapours of class IIC (including IIA and IIB)
IIIC	Electrically conductive dusts of class IIIC (including IIIA and IIIB)
T6 … T5	Temperature class to be considered, depending on the ambient temperature
T80 °C … T95 °C	Maximum surface temperature to be considered, depending on the ambient temperature
-30 °C ≤ T_a ≤ +60 °C … +75 °C or -30 °C ≤ T_a ≤ +75 °C	Permissible ambient temperature from -30 °C to +60 °C resp. -30 °C to +75 °C
Gb, Db, Mb	Equipment protection level, analogous to the equipment category
X	For a safe use of the couplings particular conditions apply

If the symbol Ⓑ was punched in addition to marking Ⓤ, the coupling component was supplied by KTR as an unbored or pilot bored version (see chapter 4.2 of the present operating/assembly instructions).

10 Enclosure A

Advice and instructions regarding the use in Ex potentially explosive atmospheres

10.5 EU Certificate of conformity

EU Declaration of Conformity resp. Certificate of Conformity

corresponding to EU directive 2014/34/EU dated 26 February 2014
and to the legal regulations adopted for its implementation

The manufacturer - KTR Systems GmbH, Carl-Zeiss-Str. 25, D-48432 Rheine - states that the

ROFLEX® couplings

in an explosion-proof design described in these assembly instructions are equipment resp. components corresponding to article 2, 1. of directive 2014/34/EU and comply with the general safety and health specifications according to enclosure II of directive 2014/34/EU.
This declaration of conformity resp. certificate of conformity is issued under the sole responsibility of the manufacturer KTR Systems GmbH.

The coupling described in here complies with the specifications of the following standards/rules:

EN ISO 80079-36:2016-12
EN ISO 80079-37:2016-12
EN ISO/IEC 80079-38:2017-10
IEC/TS 60079-32-1:2020-01-24

The ROFLEX® is in accordance with the specifications respectively the applicable specifications of directive 2014/34/EU.

The couplings marked with the symbol Ⓤ are not equipment, but components as defined in the directive 2014/34/EU and are not marked with CE. These couplings are unbored or pilot bored only and must be subjected to a final conformity assessment after finish drilling. For the necessary information refer to the operating instructions.

According to article 13 (1) b) ii) of directive 2014/34/EU the technical documentation is deposited with the notified body (type examination certificate IBExU21ATEXB005 X):

IBExU
Institut für Sicherheitstechnik GmbH
Identification number: 0637
Fuchsmühlenweg 7

09599 Freiberg

Rheine, Place	2021-10-28 Date	i. V. Reinhard Wibbeling Engineering/R&D	i. V. Michael Brüning Product Manager

10 Enclosure A

Advice and instructions regarding the use in Ex potentially explosive atmospheres

10.6 UK Declaration of conformity

UK Declaration of Conformity resp. Certificate of Conformity

corresponding to UK directive SI 2016 No. 1107 dated 26 February 2014
and to the legal provisions adopted for its implementation

The manufacturer - KTR Systems GmbH, Carl-Zeiss-Str. 25, D-48432 Rheine - states that the

ROFLEX® couplings

in an explosion-proof design described in these assembly instructions are equipment resp. components corresponding to directive SI 2016 No. 1107 and comply with the general safety and health requirements according to directive SI 2016 No. 1107.
This declaration of conformity resp. certificate of conformity is issued under the sole responsibility of the manufacturer KTR Systems GmbH.

The coupling described in here complies with the specifications of the following standards/rules:

EN ISO 80079-36:2016-12
EN ISO 80079-37:2016-12
EN ISO/IEC 80079-38:2017-10
IEC/TS 60079-32-1:2020-01-24

The ROFLEX® is in accordance with the specifications respectively the applicable specifications of directive SI 2016 No. 1107.

The couplings marked with the symbol ⓤ are not equipment, but components as defined in the directive SI 2016 No. 1107 and are not marked with CE. These couplings are unbored or pilot bored only and must be subjected to a final conformity assessment after finish drilling. For the necessary information refer to the operating instructions.

According to directive SI 2016 No. 1107 the technical documentation is deposited with the notified body:

Eurofins CML
Identification number: 2503

Rheine, Place	2021-10-28 Date	i. V. Reinhard Wibbeling Engineering/R&D	i. V. Michael Brüning Product Manager