ZVS-TDT-Viewer V 3.1

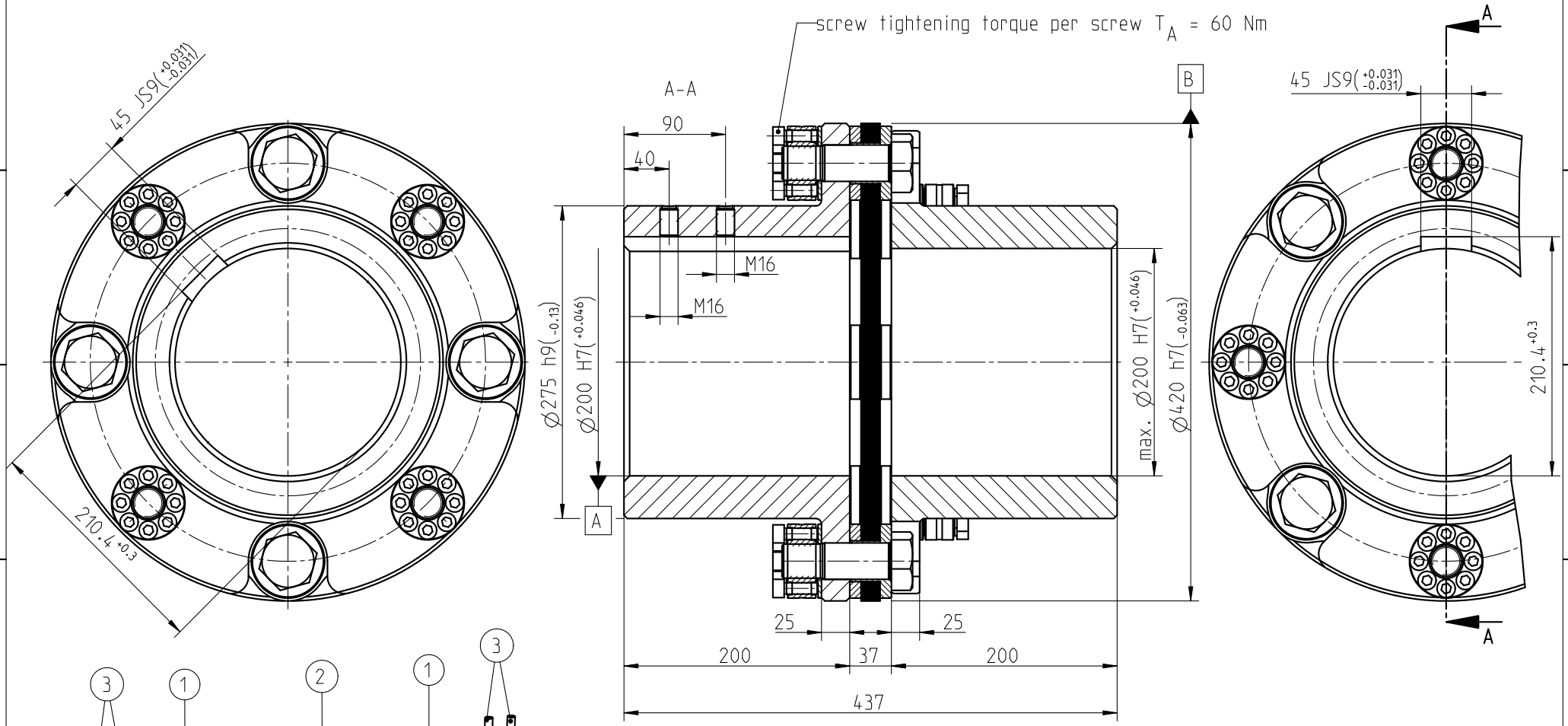

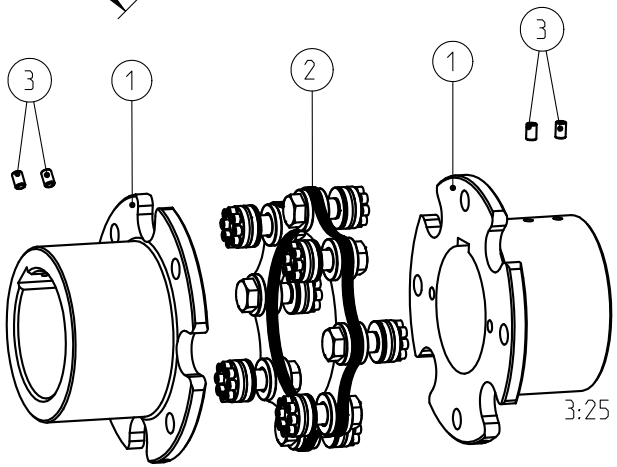

Permissilbe misalignments (max. figures may not occur simultaneously)		Coupling data	
Angular (each lamina)	Axial	Nominal torque T_{KN}	70.000 Nm
0,5°	1,75 mm	Maximum torque T_{Kmax}	140.000 Nm

Oberflaechenguete nach DIN ISO 1302 Reihe 2
Surface quality acc. to DIN ISO 1302 line 2

Schutzvermerk ISO 16016 beachten
Note protection mark acc. to ISO 16016

Allgemeintoleranzen nach DIN ISO 2768 - mH
General tolerances acc. to DIN ISO 2768 - mH

Masstab / Scale: 77:275 | Format DIN / Size: A3

RADEX-N 208
NN

KTR-Kupplungstechnik GmbH
D-48407 Rheine

	gezeichnet drawn	Werkstoff Material	.	Teilnummer Part number	Kz	Lfd.-Nr. Current number	Index Change
Datum	30.05.08	DIN			M	475763	0
Name	STA	Gewicht Weight	130.639				

NAME:STROOT OBJECT:475763 DATE:14-Apr-10 11:16:01

M.sandkoetter Zg.-Nr.:475763