GEARex®

All-steel gear couplings type:

FA, FB, FAB, DA, DB, DAB, FH, DH, FR and DR along with their combinations

according to directive 2014/34/EU and UK directive SI 2016 No. 1107

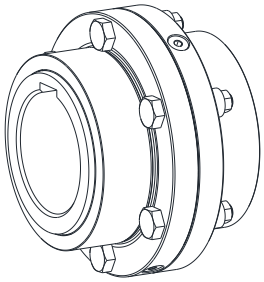

Type FA

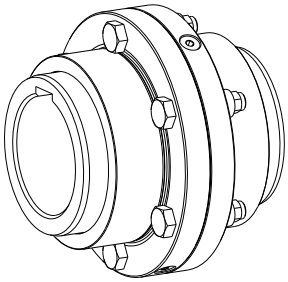

Type FB

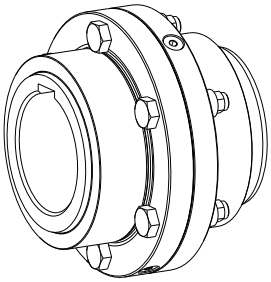

Type FAB

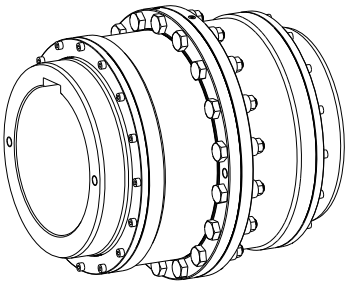

Type DA

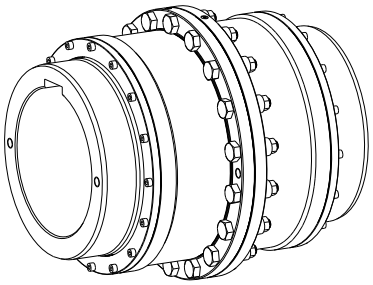

Type DB

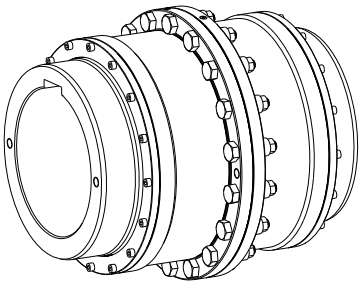

Type DAB

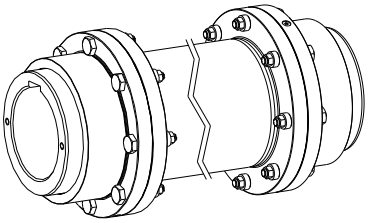

Type FH

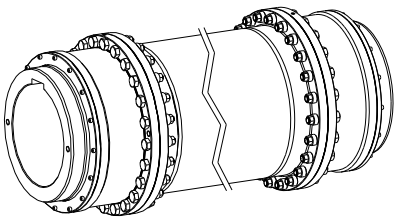

Type DH

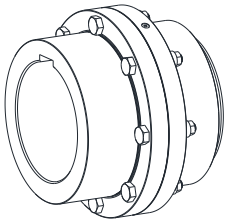

Type FR

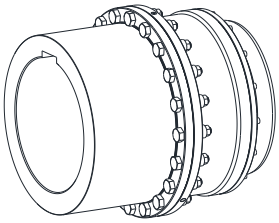

Type DR

GEARex® all-steel gear couplings are flexible shaft connections. It is able to compensate for shaft misalignment, for example caused by manufacturing inaccuracies, thermal expansion, etc.

Table of contents

Table of contents

1 Technical data

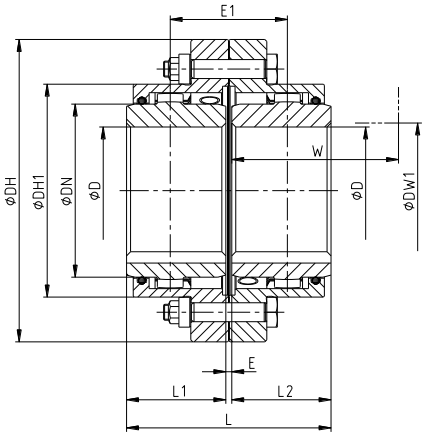

Illustration 1: Type FA

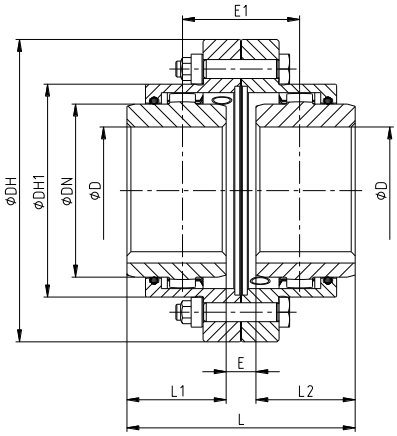

Illustration 2: Type FB

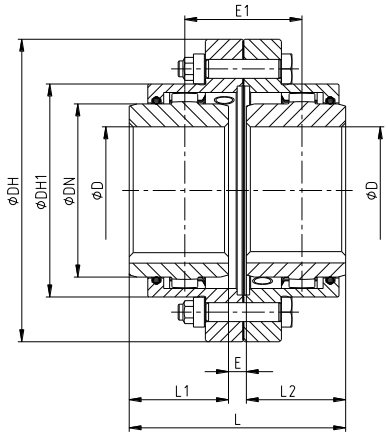

Illustration 3: Type FAB

Table 1: Dimensions - FA, FB and FAB

Size	Pilot bore	Max. finish bore D	Dimensions in mm														Grease feeding [2] in dm^3
			L1, L2	L1, L2 [3]	E			L			E1	DN	DH	DH1	W [1]	DW1 [1]	
					FA	FB	FAB	FA	FB	FAB							
10	26	50	43	105	3	21	12	89	107	98	55	67	111	83	74	52	see chapter 5.3
15	26	64	50	115	3	15	9	103	115	109	59	87	142	106	84	68	
20	31	80	62	130	3	31	17	127	155	141	79	108	174	129	104	85	
25	38	98	76	150	5	29	17	157	181	169	93	130	213	157	123	110	
30	44.5	112	90	170	5	33	19	185	213	199	109	153	240	181	148	130	
35	46	133	105	185	6	40	23	216	250	233	128	180	280	213	172	150	
40	52	158	120	215	6	42	24	246	282	264	144	214	318	249	192	175	
45	80	172	135	245	8	50	29	278	320	299	164	233	347	273	216	190	
50	80	192	150	295	8	56	32	308	356	332	182	260	390	308	241	220	
55	90	210	175	300	8	70	39	358	420	389	214	283	425.5	333	275	250	
60	100	232	190	305	8	84	46	388	464	426	236	312	457	364.5	316	265	
70	100	276	220	310	10	76	43	450	516	483	263	371	527	424	360	300	

Table 2: Technical data - FA, FB and FAB

Size	Torque [4] in Nm		Max. speed in rpm	Weight with max. bore in kg			Mass moment of inertia with max. bore in kgm^2	Dowel screws (10.9) / nuts		
	T_{KN}	T_{KN} (42CrMo4)		Sleeve	Hub	Total		Z	M	T_A in Nm
10	930	1580	8500	0.75	0.55	2.75	0.004	6	M6	15
15	2000	3300	6400	1.50	1.10	5.60	0.015	8	M8	36
20	3500	6300	5400	2.40	2.10	9.50	0.037	6	M10	72
25	6500	11000	4500	4.30	3.60	16.60	0.096	6	M12	125
30	10000	17400	4000	5.70	6.20	25.00	0.178	8	M12	125
35	17000	28800	3500	9.50	9.90	40.90	0.410	8	M14	200
40	28500	48500	3100	11.60	16.00	57.50	0.746	8	M14	200
45	37000	62000	3000	15.40	21.40	76.50	1.163	10	M14	200
50	51000	86000	2500	25.30	29.50	113.50	2.229	8	M18	430
55	65000	110000	2300	31.00	40.20	149.00	3.415	14	M18	430
60	85000	145000	2100	32.10	52.80	175.70	4.514	14	M18	430
70	135000	240000	1850	42.50	85.50	265.50	9.212	16	M20	610

1) Mounting space required to align the coupling and replace the gasket
2) Grease feeding for each coupling half
3) Hub lengthened max. L1, L2
4) Maximum torque of coupling $T_{K\,max}$ = rated torque of coupling T_{KN} x 2

1 Technical data

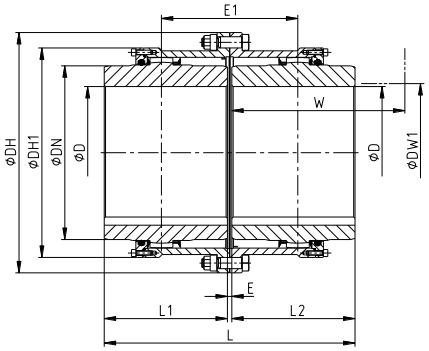

Illustration 4: Type DA

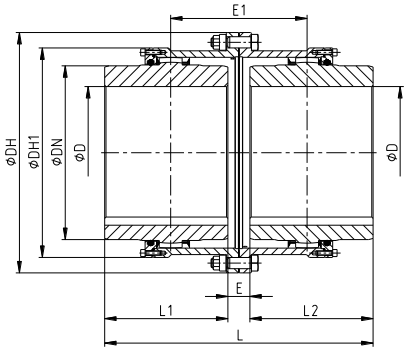

Illustration 5: Type DB

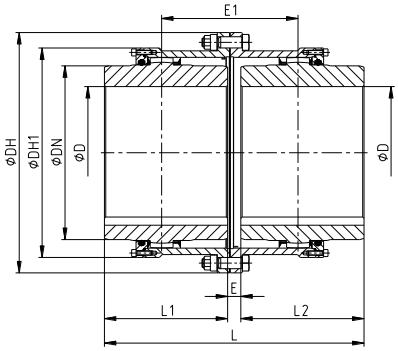

Illustration 6: Type DAB

Table 3: Dimensions - DA, DB and DAB

Size	Pilot bore	Max. finish bore D	Dimensions in mm													Grease feeding [2] in dm^3
			L1, L2	E			L			E1	DN	DH	DH1	W [1]	DW1 [1]	
				DA	DB	DAB	DA	DB	DAB							
20	31	80	62	3	31	17	127	155	144	79	108	187	146	105	85	see chapter 5.3
25	38	98	76	5	29	17	157	181	169	93	130	220	172	115	105	
30	44.5	112	90	5	33	19	185	213	199	109	153	248	182	140	120	
35	46	133	105	6	40	23	216	250	233	128	180	285	214	165	145	
40	52	158	120	6	42	24	246	282	264	144	214	335	250	180	160	
45	80	172	135	8	50	29	278	320	299	164	233	358	294	195	185	
50	80	192	150	8	56	32	388	356	332	182	260	390	309	215	205	
55	90	210	175	8	70	39	358	420	389	214	283	425.5	348	240	220	
60	100	232	190	8	84	46	388	464	426	236	312	457	380	260	245	
70	100	276	220	10	76	43	450	516	483	263	371	527	445	300	290	
80	140	300	280	10	50	30	570	610	590	310	394	545	475	340	310	
85	160	325	292	13	53	33	597	637	617	325	430	585	515	352	330	
90	180	350	305	13	83	48	623	693	658	353	464	640	560	365	360	
100	220	390	330	13	93	53	673	753	713	383	512	690	612	390	400	
110	220	420	350	20	296	158	720	996	858	508	560	765	665	410	420	
120	260	450	420	25	421	223	864	1261	1063	643	608	825	720	480	470	
130	300	500	440	25	415	220	905	1295	1100	660	684	950	805	520	520	
140	380	550	460	20	430	225	940	1350	1145	685	750	1020	875	570	590	
150	460	630	520	30	460	245	1070	1500	1285	765	850	1140	975	630	670	

Table 4: Technical data - DA, DB and DAB

Size	Torque [3] in Nm		Max. speed in rpm	Weight with max. bore in kg			Mass moment of inertia with max. bore in kgm^2	Dowel screws (10.9) / nuts		
	T_{KN}	T_{KN} (42CrMo4)		Sleeve	Hub	Total		Z	M	T_A in Nm
20	3500	6300	5400	3.6	2.1	12.8	0.056	6	M10	72
25	6500	11000	4500	5.5	3.6	20.3	0.125	6	M12	125
30	10000	17400	4000	6.9	6.2	28.9	0.219	8	M12	125
35	17000	28800	3500	11.2	9.8	46.6	0.488	8	M14	200
40	28500	48500	3100	16.3	15.9	70.9	1.011	8	M14	200
45	37000	62000	3000	20.2	21.4	90.7	1.482	10	M14	200
50	51000	86000	2500	27.0	29.5	123.5	2.474	8	M18	430
55	65000	110000	2300	32.6	40.2	159.1	3.714	14	M18	430
60	85000	145000	2100	32.0	52.8	184.4	4.810	14	M18	430
70	135000	240000	1850	43.8	85.5	280	9.907	16	M20	610
80	175000	300000	1750	64	117	362	14.214	18	M20	610
85	225000	380000	1650	75	148	446	20.320	20	M20	610
90	-	500000	1550	101	183	568	31.036	20	M24	1000
100	-	650000	1500	117	232	698	45.358	24	M24	1000
110	-	820000	1250	140	295	940	73.880	20	M30	1700
120	-	1050000	1150	188	430	1312	118.40	24	M30	1700
130	-	1450000	1000	330	595	1965	235.431	20	M36	2800
140	-	1950000	950	391	751	2411	343.432	24	M36	2800
150	-	2750000	850	488	1057	3242	575.453	30	M36	2800

1) Mounting space required to align the coupling and replace the gasket
2) Grease feeding for each coupling half
3) Maximum torque of coupling $T_{K\,max}$ = rated torque of coupling T_{KN} x 2

1 Technical data

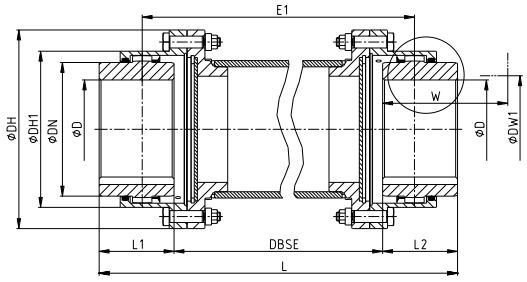

Illustration 7

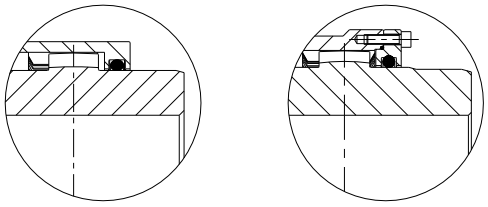

Type FH (size 10 to 70) | Type DH (size. 80 to 150)

Illustration 8: type FH / DH

Table 5: Dimensions - FH and DH

Size	Pilot bore	Max. finish bore D	Dimensions in mm											Grease feeding [2] in dm^3
			L1, L2	Hub lengthened max. L1, L2	DN	DH [3]	DH1 [3]	L	E1 FH	E1 DH	DBSE	W [1]	DW1 [1]	
10	26	50	43	105	67	111	83	L = L1 + L2 + DBSE	According to customer specification	According to customer specification	According to customer specification	74	52	see chapter 5.3
15	26	64	50	115	87	142	106					84	68	
20	31	80	62	130	108	174	129					104	85	
25	38	98	76	150	130	213	157					123	110	
30	44.5	112	90	170	153	240	181					148	130	
35	46	133	105	185	180	280	213					172	150	
40	52	158	120	215	214	318	249					192	175	
45	80	172	135	245	233	347	273					216	190	
50	80	192	150	295	260	390	308					241	220	
55	90	210	175	300	283	425.5	333					275	250	
60	100	232	190	305	312	457	364.5					316	265	
70	100	276	220	310	371	527	424					360	300	
80	140	300	280	-	394	545	475					340	310	
85	160	325	292	-	430	585	515					352	330	
90	180	350	305	-	464	640	560					365	360	
100	220	390	330	-	512	690	612					390	400	
110	220	420	350	-	560	765	665					410	420	
120	260	450	420	-	608	825	720					480	470	
130	300	500	440	-	684	950	805					520	520	
140	380	550	460	-	750	1020	875					570	590	
150	460	630	520	-	850	1140	975					630	670	

Table 6: Technical data - FH and DH

Size	Torque [4] in Nm		Dowel screws (10.9) / nuts		
	T_{KN}	T_{KN} (42CrMo4)	Z [5]	M	T_A in Nm
10	930	1580	6	M6	15
15	2000	3300	8	M8	36
20	3500	6300	6	M10	72
25	6500	11000	6	M12	125
30	10000	17400	8	M12	125
35	17000	28800	8	M14	200
40	28500	48500	8	M14	200
45	37000	62000	10	M14	200
50	51000	86000	8	M18	430
55	65000	110000	14	M18	430
60	85000	145000	14	M18	430
70	135000	240000	16	M20	610
80	175000	300000	18	M20	610
85	225000	380000	20	M20	610
90	-	500000	20	M24	1000
100	-	650000	24	M24	1000
110	-	820000	20	M30	1700
120	-	1050000	24	M30	1700
130	-	1450000	20	M36	2800
140	-	1950000	24	M36	2800
150	-	2750000	30	M36	2800

1) Mounting space required to align the coupling and replace the gasket
2) Grease feeding for each coupling half
3) For dimensions of type F see table 1; type D see table 3
4) Maximum torque of coupling $T_{K\,max}$ = rated torque of coupling T_{KN} x 2
5) Number for each coupling half

1 Technical data

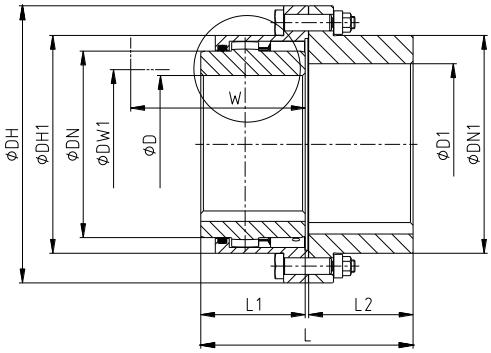

Illustration 9

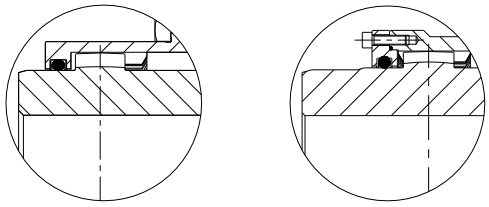

Type FR (size 10 to 70)

Type DR (size. 80 to 150)

Illustration 10: Type FR / DR

Table 7: Dimensions - FR and DR

Size	Max. finish bore		Dimensions in mm									Grease feeding [2] in dm³
	D	D1	L1, L2	Hub lengthened max. L1, L2	DN	DH	DH1	DN1	L	W [1]	DW1 [1]	
10	50	60	43	105	67	111	83	84	88	74	52	see chapter 5.3
15	64	78	50	115	87	142	106	107	103	84	68	
20	80	95	62	130	108	174	129	130	127	104	85	
25	98	115	76	150	130	213	157	158	157	123	110	
30	112	135	90	170	153	240	181	182	185	148	130	
35	133	155	105	185	180	280	213	214	216	172	150	
40	158	185	120	215	214	318	249	250	244	192	175	
45	172	200	135	245	233	347	273	274	276	216	190	
50	192	225	150	295	260	390	308	309	305	241	220	
55	210	245	175	300	283	425.5	333	334	356	275	250	
60	232	265	190	305	312	457	364.5	365.5	386	316	265	
70	276	310	220	310	371	527	424	425	450	360	300	
80	300	340	280	-	394	545	475	462	570	340	310	
85	325	370	292	-	430	585	515	500	597	352	330	
90	350	400	305	-	464	640	560	546	623	365	360	
100	390	440	330	-	512	690	612	594	673	390	400	
110	420	480	350	-	560	765	665	647	710	410	420	
120	450	520	420	-	608	825	720	700	852	480	470	
130	500	560	440	-	684	950	805	760	890	520	520	
140	550	610	460	-	750	1020	875	835	930	570	590	
150	630	690	520	-	850	1140	975	935	1055	630	670	

Table 8: Technical data - FR and DR

Size	Torque [3] in Nm		Dowel screws (10.9) / nuts		
	T_{KN}	T_{KN} (42CrMo4)	Z	M	T_A in Nm
10	930	1580	6	M6	15
15	2000	3300	8	M8	36
20	3500	6300	6	M10	72
25	6500	11000	6	M12	125
30	10000	17400	8	M12	125
35	17000	28800	8	M14	200
40	28500	48500	8	M14	200
45	37000	62000	10	M14	200
50	51000	86000	8	M18	430
55	65000	110000	14	M18	430
60	85000	145000	14	M18	430
70	135000	240000	16	M20	610
80	175000	300000	18	M20	610
85	225000	380000	20	M20	610
90	-	500000	20	M24	1000
100	-	650000	24	M24	1000
110	-	820000	20	M30	1700
120	-	1050000	24	M30	1700
130	-	1450000	20	M36	2800
140	-	1950000	24	M36	2800
150	-	2750000	30	M36	2800

1) Mounting space required to align the coupling and replace the gasket
2) Grease feeding for each coupling half
3) Maximum torque of coupling $T_{K\,max}$ = rated torque of coupling T_{KN} x 2

2 Advice

2.1 General advice

Please read through these operating/assembly instructions carefully before you start up the coupling.
Please pay special attention to the safety instructions!

The **GEARex®** coupling is suitable and approved for use in potentially explosive atmospheres. When using the coupling in potentially explosive atmospheres, observe the special advice and instructions regarding safety in enclosure A.

The operating/assembly instructions are part of your product. Please store them carefully and close to the coupling. The copyright for these operating/assembly instructions remains with KTR.

2.2 Safety and advice symbols

Warning of potentially explosive atmospheres	This symbol indicates notes which may contribute to preventing bodily injuries or serious bodily injuries that may result in death caused by explosion.
Warning of personal injury	This symbol indicates notes which may contribute to preventing bodily injuries or serious bodily injuries that may result in death.
Warning of product damages	This symbol indicates notes which may contribute to preventing material or machine damage.
General advice	This symbol indicates notes which may contribute to preventing adverse results or conditions.
Warning of hot surfaces	This symbol indicates notes which may contribute to preventing burns with hot surfaces resulting in light to serious bodily injuries.

2.3 General hazard warnings

With assembly, operation and maintenance of the coupling it has to be made sure that the entire drive train is secured against accidental switch-on. You may be seriously hurt by rotating parts. Make absolutely sure to read through and observe the following safety indications.

- All operations on and with the coupling have to be performed taking into account "safety first".
- Make sure to switch off the coupling and power packs connected before you perform your work.
- Secure the power pack against accidental switch-on, e. g. by providing warning signs at the place of switch-on or removing the fuse for current supply.
- Do not reach into the operating area of the coupling as long as it is in operation.
- Secure the coupling against accidental contact. Provide for the necessary protection devices and covers.

2 Advice

2.4 Intended use

You may only assemble, operate and maintain the coupling if you

- have carefully read through the operating/assembly instructions and understood them
- are technically qualified and specifically trained (e. g. safety, environment, logistics)
- are authorized by your company

The coupling may only be used in accordance with the technical data (see chapter 1). Unauthorized modifications on the coupling design are not admissible. We will not assume liability for any damage that may arise. In the interest of further development we reserve the right for technical modifications.
The **GEARex®** described in here corresponds to the technical status at the time of printing of these operating/assembly instructions.

2.5 Coupling selection

For a long-lasting and failure-free operation of the coupling it must be selected according to the selection instructions for the particular application (see catalogue drive technology "GEARex®").
If the operating conditions (performance, speed, modifications on engine and machine) change, the coupling selection must be reviewed.
The transmittable torque of the shaft-hub-connection must be reviewed by the customer and is subject to his responsibility.

If used in potentially explosive atmospheres clamping set connections and shrink fit connections (transverse interference fits) without feather key must be selected in that there is a minimum safety factor of s = 2.0 between the peak torque of the machine including all operating parameters and the frictional locking torque of the shaft-hub-connection. The responsibility for the shaft-hub-connection is subject to the customer. Please review the connection carefully.

For drives subjected to torsional vibrations (drives with cyclic stress due to torsional vibrations) it is necessary to perform a torsional vibration calculation to ensure a reliable selection. Typical drives subjected to torsional vibrations are e. g. drives with piston pumps, piston compressors etc. If requested, KTR will perform the coupling selection and the torsional vibration calculation.

2.6 Reference to EC Machinery Directive 2006/42/EC

The couplings supplied by KTR should be considered as components, not machines or partly completed machines according to EC Machinery Directive 2006/42/EC. Consequently KTR does not have to issue a declaration of incorporation. For details about safe assembly, start-up and safe operation refer to the present operating/assembly instructions considering the warnings.

3 Storage, transport and packaging

3.1 Storage of the coupling

Unless explicitly ordered differently, the coupling is supplied with preservation and may be stored in a dry and roofed place for a period of up to 3 months.
In case of a longer intended storage period please consult with KTR.

3.2 Storage of O-rings

Proper storage conditions increase the service life of O-rings. For the storage of O-rings basically DIN 7716 (standards for storage, maintenance and cleaning of rubber products) or ISO 2230 (rubber products - standards for storage) applies.
The physical characteristics and period of operation may be subject to numerous negative influences like, as an example, light, heat, moisture, oxygen, ozone, etc.
In general the optimum storage condition is said to be welded in polyethylene bags with temperatures between +5 °C to +20 °C.

The O-rings (component 8) must not be stored mounted to the hubs (component 1).

The storage space should be dry and free from dust. The O-rings (component 8) must not be stored together with chemicals, polar solvents, fuels, acids, etc.

3.3 Transport and packaging

In order to avoid any injuries and any kind of damage always make use of proper transport and lifting equipment.

The couplings are packed differently each depending on size, number and kind of transport. Unless otherwise contractually agreed, packaging will follow the in-house packaging specifications of KTR.

4 Assembly

Observe the manufacturer’s instructions regarding the use of solvents.

STOP

Driving components falling down may cause injury to persons or damage on the machine. Secure the driving components with assembly or disassembly.

4 Assembly

The coupling is generally supplied in individual parts. Before assembly the coupling has to be inspected for completeness.

4.1 Components of the couplings

Type FA, FB and FAB

Component	Quantity	Description
1	2	Hub
2	2	Sleeve
3	see table 2	Fit bolts
4	see table 2	Nut
5	1	Flat gasket
6	4	Washers DIN 7603
7	4	Screw plugs DIN 908 [1)]
8	2	O-ring - material 70 NBR

1) With size 10 cap screws DIN 7984 - 8.8

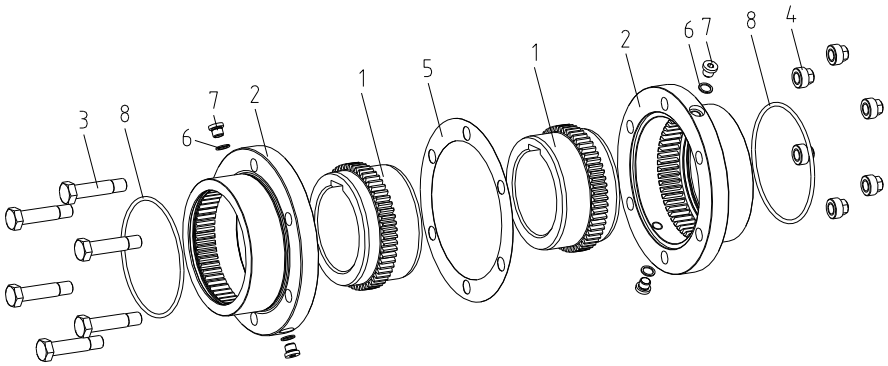

Illustration 11: GEARex® type FA

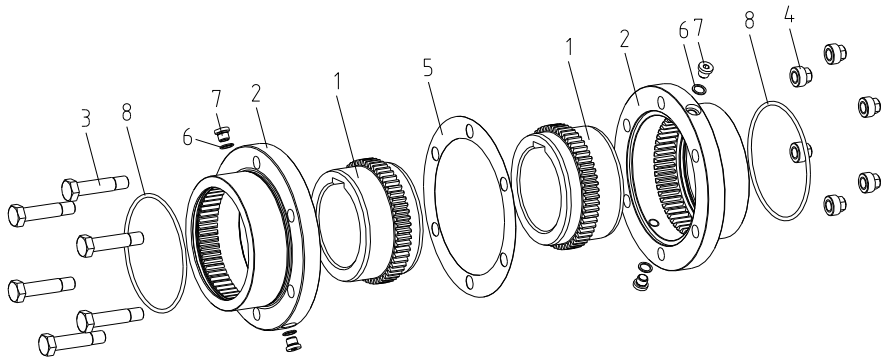

Illustration 12: GEARex® type FB

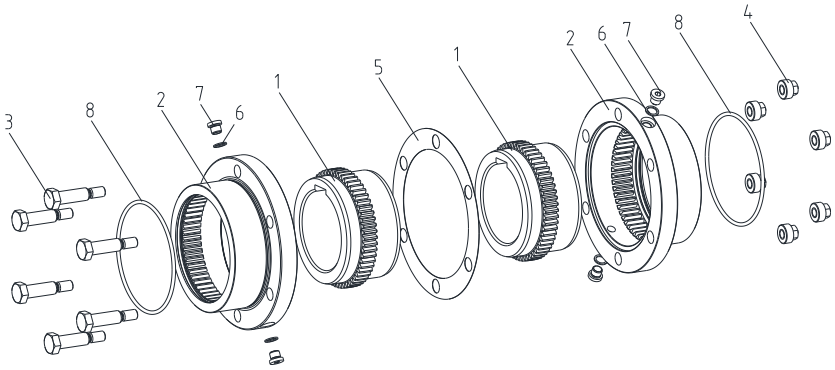

Illustration 13: GEARex® type FAB

4 Assembly

4.1 Components of the couplings

Type DA, DB and DAB

Component	Quantity	Description
1	2	Hub
2	2	Sleeve
3	see table 4	Fit bolts
4	see table 4	Nut
5	1	Flat gasket
6	4	Washers DIN 7603
7	4	Screw plugs DIN 908
8	2	O-ring - material 70 NBR
9	2	Cover
10	see table 10	Cap screws DIN EN ISO 4762
11	2	O-ring - material 70 NBR

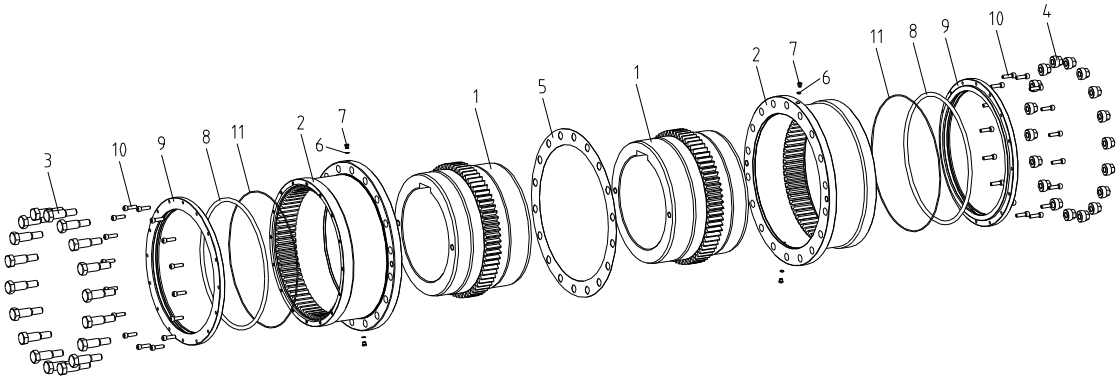

Illustration 14: GEARex® type DA

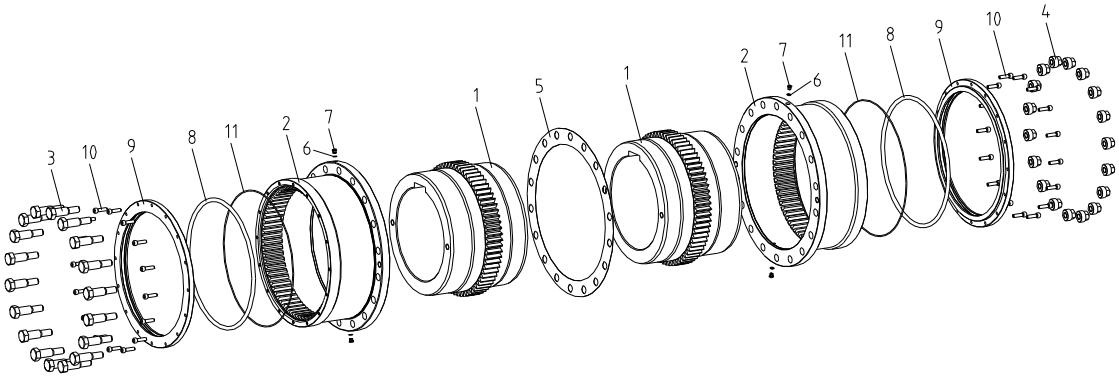

Illustration 15: GEARex® type DB

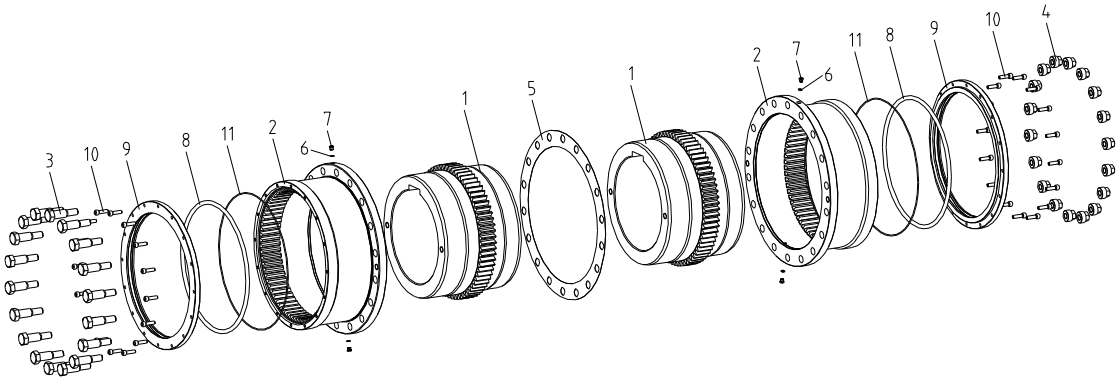

Illustration 16: GEARex® type DAB

4 Assembly

4.1 Components of the couplings

Type FH

Component	Quantity	Description
1	2	Hub
2	2	Sleeve
3	see table 6	Fit bolts
4	see table 6	Nut
5	2	Flat gasket
6	4	Washers DIN 7603
7	4	Screw plugs DIN 908 1)
8	2	O-ring - material 70 NBR
13	1	Spacer

1) With size 10 cap screws DIN 7984 - 8.8

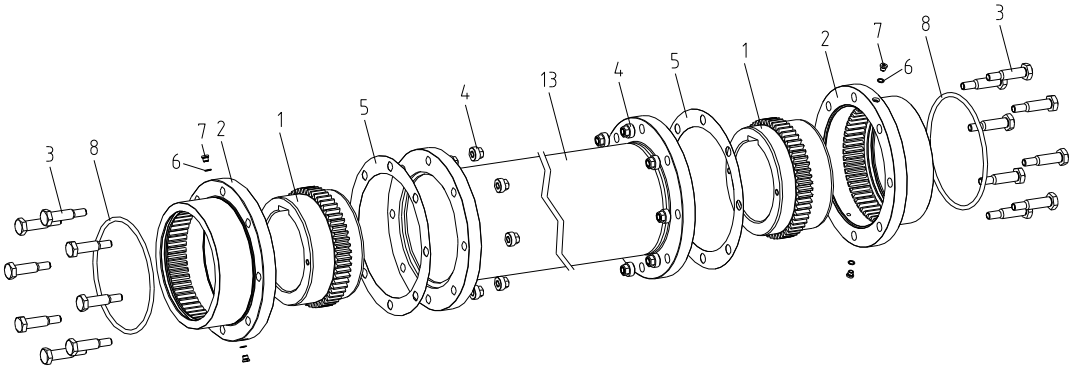

Illustration 17: GEARex® type FH

Type DH

Component	Quantity	Description
1	2	Hub
2	2	Sleeve
3	see table 6	Fit bolts
4	see table 6	Nut
5	2	Flat gasket
6	4	Washers DIN 7603
7	4	Screw plugs DIN 908
8	2	O-ring - material 70 NBR
9	2	Cover
10	see table 10	Cap screws DIN EN ISO 4762
11	2	O-ring - material 70 NBR
13	1	Spacer

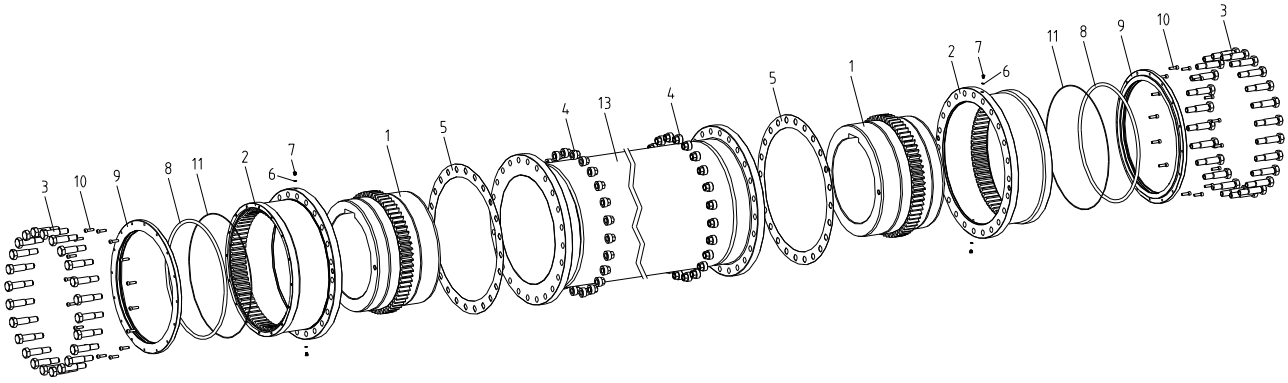

Illustration 18: GEARex® type DH

4 Assembly

4.1 Components of the couplings

Type FR

Component	Quantity	Description
1	1	Hub
2	1	Sleeve
3	see table 8	Fit bolts
4	see table 8	Nut
5	1	Flat gasket
6	2	Washers DIN 7603
7	2	Screw plugs DIN 908 1)
8	1	O-ring - material 70 NBR
12	1	Flange hub

1) With size 10 cap screws DIN 7984 - 8.8

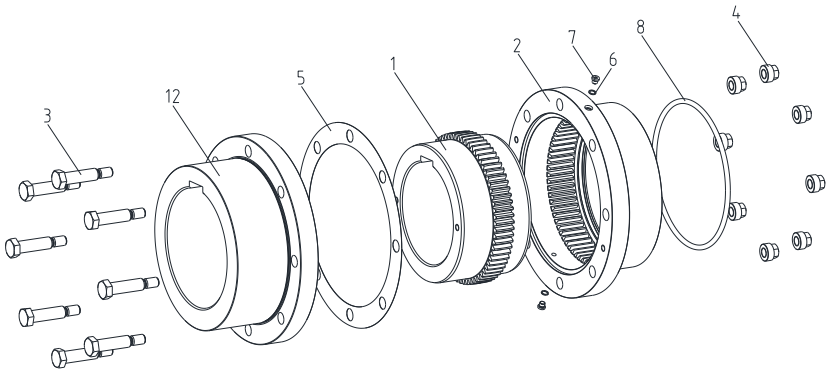

Illustration 19: GEARex® type FR

Type DR

Component	Quantity	Description
1	1	Hub
2	1	Sleeve
3	see table 8	Fit bolts
4	see table 8	Nut
5	1	Flat gasket
6	2	Washers DIN 7603
7	2	Screw plugs DIN 908
8	1	O-ring - material 70 NBR
9	2	Cover
10	see table 10	Cap screws DIN EN ISO 4762
11	2	O-ring - material 70 NBR
12	1	Flange hub

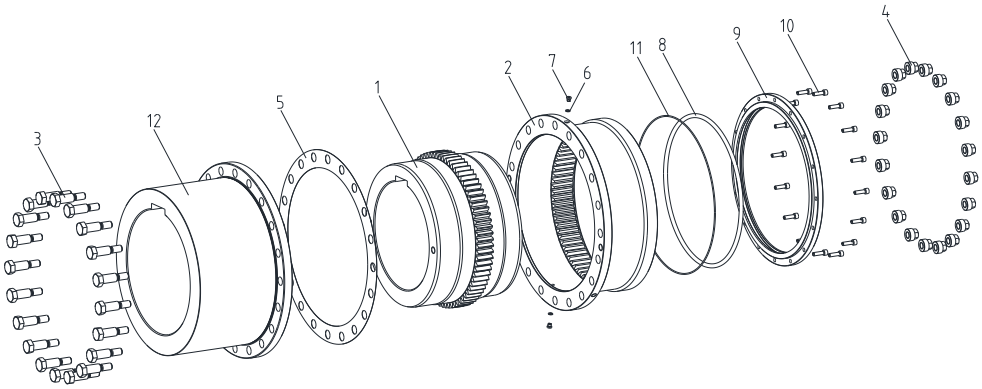

Illustration 20: GEARex® type DR

4 Assembly

4.2 Advice for finish bore

The maximum permissible bore diameters D (see chapter 1 - technical data) must not be exceeded. If these figures are disregarded, the coupling may tear. Rotating particles may cause danger to life.

Never clamp on the sealing surface!

- Hub bores machined by the customer have to observe concentricity resp. axial runout (see illustration 21 to 25).
- Make absolutely sure to observe the figures for ØD (see chapter 1).
- Carefully align the hubs when the finish bores are drilled.
- Provide for a setscrew according to DIN EN ISO 4029 with a cup point, an end plate or shrink fit to fasten the hubs axially (see illustration 21 to 25 and table 9 and 10).
- If any other shaft-hub-connections (e. g. clamping elements, spline, taper bores, etc.) are to be used, please consult with KTR.

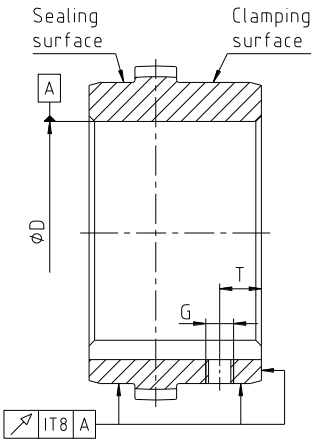

Illustration 21: Clamping/sealing surfaces of types: FA, FAB and FR

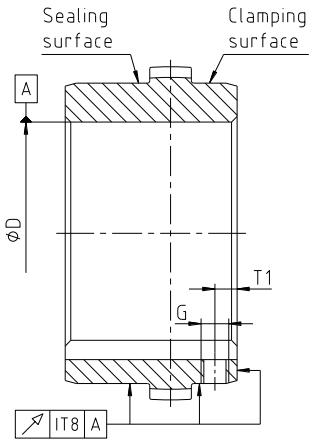

Illustration 22: Clamping/sealing surfaces of types: FB, FAB and FH

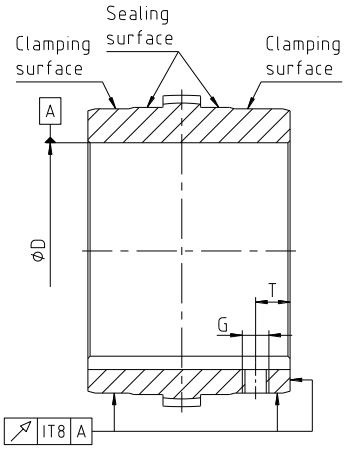

Illustration 23: Clamping/sealing surfaces of types: DA, DAB and DR

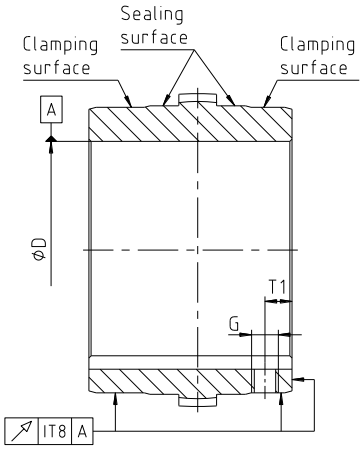

Illustration 24: Clamping/sealing surfaces of types: DB, DAB and DH

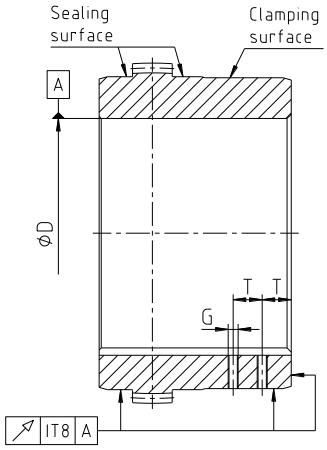

Illustration 25: Clamping/sealing surfaces of size 130 to 150

4 Assembly

4.2 Advice for finish bore

The customer bears the sole responsibility for all machining processes performed subsequently on unbored or pilot bored as well as finish machined coupling components and spare parts. KTR does not assume any warranty claims resulting from insufficient remachining.

KTR supplies unbored or pilot bored coupling components and spare parts only upon explicit request of the customer. These parts are additionally marked with the symbol Ⓤ.

<u>Reference to unbored resp. pilot bored coupling components with explosion protection marking:</u>
Basically the company KTR Systems GmbH supplies couplings resp. coupling hubs with explosion protection marking as an unbored or pilot bored type only on explicit request of the customer. The prerequisite is a declaration of exemption submitted by the customer assuming any responsibility and liability for respective remachining performed on the product of KTR Systems GmbH. According to the ATEX directives §47 and §48 unbored resp. pilot bored coupling hubs are classified as component(s). That is why KTR Systems GmbH is not in a position to provide for a CE symbol for the said components. Having drilled the coupling hubs, the customer has to perform a conformity assessment procedure.

4.3 Assembly of the coupling (general)

In case if a dimensional drawing was prepared for the coupling, the dimensions specified have to be primarily observed.
The operator of the machine is to be provided with the dimensional drawing.

We recommend to inspect bores, shaft, keyway and feather key for dimensional accuracy before assembly.

Heating the hubs lightly (approx. 80 °C) allows for an easier mounting on the shaft.

Please pay attention to the ignition risk in potentially explosive atmospheres!

Touching the heated components causes burns.
Please wear safety gloves.

With the assembly make sure that the dimension E (see table 1, 3, 5 and 7) is observed to allow for axial clearance of the sleeve while in operation.
Disregarding this advice may cause damage to the coupling.

If used in potentially explosive atmospheres the setscrews to fasten the hubs as well as all screw connections must be secured against working loose additionally, e. g. conglutinating with Loctite (average strength).

If you note any irregularities with the coupling during operation, the drive unit must be switched off immediately. The cause of the breakdown must be specified by means of the table „Breakdowns“ and, if possible, be eliminated according to the proposals. The potential breakdowns specified can be hints only. To find out the cause all operating factors and machine components must be considered.

4 Assembly

4.4 Assembly of types FA, FB, FAB, FH and FR

- Clean all components and shaft ends carefully (see chapter 7.6). The O-rings (component 8) must not get in touch with polar solvents and detergents.
- Lightly grease the O-rings (component 8) and insert in the corresponding keyway of the sleeves (component 2).
- Lightly grease the sealing surfaces on the face of the sleeves (component 2) and push them over the shaft ends. Make sure the O-rings (component 8) are not damaged.

To facilitate the assembly, heat the hubs (component 1) or flange hub (component 12) evenly by inductive heating (approx. 80 °C), either in the furnace or by means of a burner.

- Push the hubs (component 1) resp. flange hub (component 12) on the shaft of the driving and driven side so that the front faces of the hub are flush with the shaft ends. When the hubs are heated, any contact with the O-rings (component 8) should be avoided.

Make sure with the assembly that the shaft ends do not protrude over the front faces of the hub.

- **<u>Valid with coupling hubs with feather keyway and setscrew only:</u>**
  Fill the tapping for axial fastening with sealing compound for 2/3.
- Secure the hubs (component 1) or flange hub (component 12) axially by tightening the setscrews DIN EN ISO 4029 by means of a cup point (tightening torque T_A see table 9), an end plate or by shrink fit.

Basically make sure with the assembly that the shaft-hub-connection is sealed such that grease cannot escape from the coupling.

Before filling with grease coupling hubs with feather keyway and setscrew have to be cooled down to ambient temperature in order to prevent escaping of lubricant in the area of the feather key.

- Shift the power packs in axial direction until the dimension E is achieved (see table 1, 5 and 7).
- Align both shafts and inspect the permissible displacement figures as per chapter 4.6.
- Grease the spline of the hubs (component 1) and sleeves (component 2) (grease capacity see table 12), afterwards pull the sleeves over the spline of the hubs and keep them in place.
- Align the fitting hole of the sleeves (component 2) or flange hub (component 12) flush. Make sure that the lubrication holes on both sleeves have an angle of 90° to each other.
- **<u>Applying for type FH only:</u>**
  Push the spacer (component 13) between the two sleeves and align the fitting holes flush with the sleeves.
- Insert the flat gasket (component 5) and screw together the sleeves resp. sleeve and flange hub by means of the dowel screws (component 3) and nuts (component 4), observing the tightening torques specified (see table 9).
- Observe the instructions specified in chapter start-up and lubrication (see chapter 5).

With each reassembly of the coupling we recommend to replace the flat gasket (component 5) and the dowel screws (component 3) as well as nuts (component 4).

4 Assembly

4.4 Assembly of types FA, FB, FAB, FH and FR

Table 9:

Size	Setscrew DIN EN ISO 4029 in mm				Dowel screws (10.9) screw connection of sleeves			
	G	T [1]	T1 [1]	T_A in Nm	Number Z	Number Z (type FH)	M	T_A in Nm
10	M8	10	6	10	6	12	M6	15
15	M8	10	6	10	8	16	M8	36
20	M10	15	8	17	6	12	M10	72
25	M10	15	8	17	6	12	M12	125
30	M12	20	12	40	8	16	M12	125
35	M12	24	15	40	8	16	M14	200
40	M16	25	18	80	8	16	M14	200
45	M16	30	18	80	10	20	M14	200
50	M20	35	22	140	8	16	M18	430
55	M20	40	25	140	14	24	M18	430
60	M20	45	25	140	14	24	M18	430
70	M24	50	35	240	16	32	M20	610

1) See illustration 21 and 22

4.5 Assembly of types DA, DB, DAB, DH and DR

- Clean all components and shaft ends carefully (see chapter 7.6). The O-rings (component 8 and 11) must not get in touch with solvents and detergents.
- **<u>Valid with split cover only:</u>**
  - Apply a sealing agent on the contact surfaces of the split cover.
  - Push the split cover together.
  - Screw the split cover together with the cap screws. Learn the tightening torque from the dimensional drawing attached.
- Lightly grease the O-rings (component 8) and insert in the provided keyway of the cover (component 9).
- Lightly grease the sealing surfaces on the face of the sleeves (component 2).

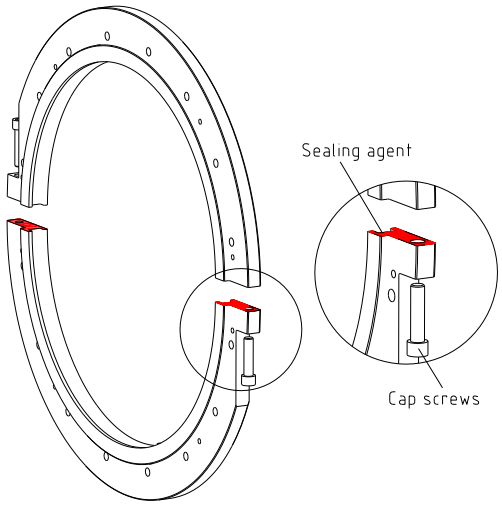

Illustration 26: Assembly of the split cover

To facilitate the assembly, heat the hubs (component 1) evenly by inductive heating (approx. 80 °C), either in the furnace or by means of a burner.

- Push the hubs (component 1) on the shaft of the driving and driven side until the front surfaces of the hub are flush with the shaft ends. When the hubs are heated, any contact with the O-rings (component 8 and 11) should be avoided.

Make sure with the assembly that the shaft ends do not protrude over the front faces of the hub.

- **<u>Valid with coupling hubs with feather keyway and setscrew only:</u>**
  Fill the tapping for axial fastening with sealing compound for 2/3.
- Secure the hubs (component 1) axially by tightening the setscrews DIN EN ISO 4029 by means of a cup point (tightening torque T_A see table 10), an end plate or by shrink fit.

4 Assembly

4.5 Assembly of types DA, DB, DAB, DH and DR

☞ **Basically make sure with the assembly that the shaft-hub-connection is sealed such that grease cannot escape from the coupling.**

☞ **Before filling with grease coupling hubs with feather keyway and setscrew have to be cooled down to ambient temperature in order to prevent escaping of lubricant in the area of the feather key.**

- Shift the power packs in axial direction until the dimension E is achieved (see table 3, 5 and 7).
- Align both shafts and inspect the permissible displacement figures as per chapter 4.6.
- Put the O-rings (component 11) on the pilot of the cover (component 9).
- Afterwards push the sleeves (component 2) onto the hubs (component 1).
- Screw the cover (component 9) and the sleeves (component 2) together with the cap screws (component 10) (for tightening torque T_A see table 10).
- Push the sleeve along with the cover far over the hub and put it on the shaft ends. Make sure the O-rings (component 8) are not damaged.
- Grease the spline of the hubs (component 1) and sleeves (component 2) (grease capacity see table 12), afterwards pull the sleeves over the spline of the hubs and keep them in place.
- Align the fitting holes of the sleeves (component 2) flush. Make sure that the lubrication holes on both sleeves have an angle of 90° to each other.
- **Applying for type DH only:**
  Push the spacer (component 13) between the two sleeves and align the fitting holes to be flush with the sleeves.
- Insert the flat gasket (component 5) and screw the sleeves together by means of dowel screws (component 3) and nuts (component 4), observing the tightening torques specified (see table 10).
- Observe the instructions specified in chapter start-up and lubrication (see chapter 5).

☞ **With each reassembly of the coupling we recommend to replace the flat gasket (component 5) and the dowel screws (component 3) as well as nuts (component 4).**

Table 10:

Size	Setscrew DIN EN ISO 4029 in mm				Dowel screws (10.9) screw connection of sleeves				Screw connection of cover with sleeves		
	G	T 1)	T1 1)	T_A in Nm	Number Z	Number Z (type DH)	M	T_A in Nm	Number Z	M	T_A in Nm
20	M10	15	8	17	6	12	M10	72	24	M6	14
25	M10	15	8	17	6	12	M12	125	24	M6	14
30	M12	20	12	40	8	16	M12	125	32	M6	14
35	M12	24	15	40	8	16	M14	200	24	M8	35
40	M16	25	18	80	8	16	M14	200	24	M8	35
45	M16	30	18	80	10	20	M14	200	24	M8	35
50	M20	35	22	140	8	16	M18	430	24	M8	35
55	M20	40	25	140	14	28	M18	430	32	M8	35
60	M20	45	25	140	14	28	M18	430	24	M10	69
70	M24	50	35	240	16	32	M20	610	24	M10	69
80	M24	60	40	240	18	36	M20	610	32	M10	69
85	M24	60	40	240	20	40	M20	610	32	M10	69
90	M24	65	30	240	20	40	M24	1000	32	M10	69
100	M24	80	40	240	24	48	M24	1000	32	M10	69
110	M24	80	40	240	20	40	M30	1700	24	M12	120
120	M24	80	40	240	24	48	M30	1700	32	M12	120
130	M24	70	-	240	20	40	M36	2800	48	M12	120
140	M24	80	-	240	24	48	M36	2800	48	M12	120
150	M24	90	-	240	30	60	M36	2800	48	M12	120

1) See illustration 23 to 25

4 Assembly

4.6 Displacements - alignment of the couplings

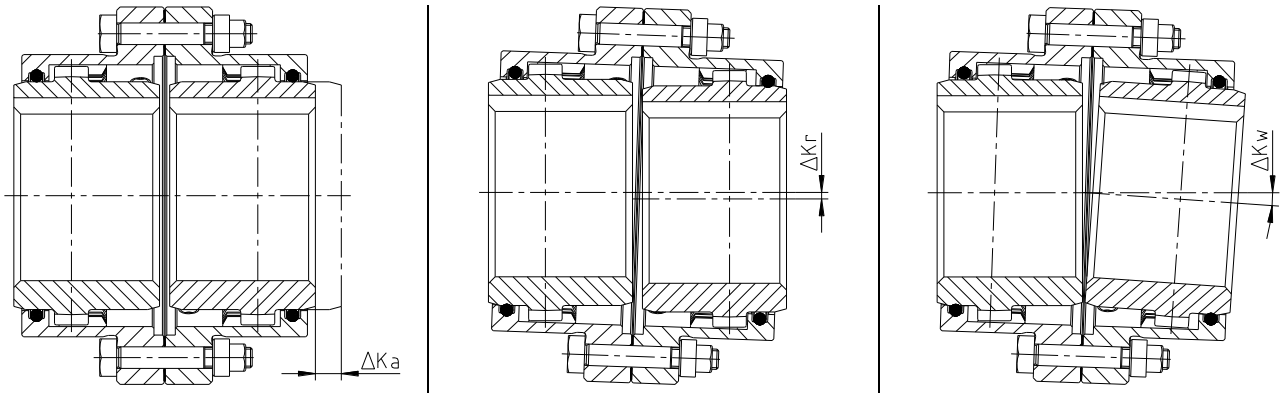

Axial displacements | Radial displacements | Angular displacements

Illustration 27: Displacements

Table 11: Displacement figures

Size	Max. axial displacement ΔK_a in mm	Max. permissible displacements in mm		
		ΔK_r 1)		ΔK_w 1) in °
		Type FA, FB, FAB, DA, DB and DAB	Type FH and DH	
10	± 1.0	0.4	$\Delta K_r = \tan 0.5° \times L_{3FH}$ or $\Delta K_r = \tan 0.5° \times L_{3DH}$	0.5° each hub
15		0.5		
20		0.6		
25		0.8		
30		1.0		
35		1.0		
40	± 1.5	1.2		
45		1.4		
50		1.6		
55		1.8		
60		2.0		
70		2.2		
80	± 2.0	2.5		
85		2.8		
90		3.0		
100		3.2		
110		4.4		
120		5.5		
130	± 2.5	5.7		
140		6.0		
150		6.6		

1) Make absolutely sure to adhere to the dimension E specified for the various types, specifically with radial and angular displacement (see tables 1, 3, 5 and 7).

In order to ensure a long service life of the coupling, the coupling must be aligned to at least 20 % of the displacement combinations that may arise during operation (see illustration 27 and 28). Please absolutely observe the displacement figures specified (see table 11). If the figures are exceeded, the coupling will be damaged.

In order to improve the lubrication effect of the coupling, a minimum angular displacement of 0.1° per displacement level must be observed.

Misalignment of the coupling components to one another may have been generated by incorrect alignment with assembly or operation of the machine (thermal expansion, shafts bending, elastic machine mounts, etc.).
The displacement figures specified in table 11 are maximum figures which must not arise in parallel.
If radial and angular displacement arises at the same time, these values must be reduced (see illustration 28).

4 Assembly

4.6 Displacements - alignment of the couplings

Examples of the displacement combinations specified in illustration 28:

Example 1:
ΔK_r = 30 %
ΔK_w = 70 %

Example 2:
ΔK_r = 60 %
ΔK_w = 40 %

$$\Delta K_{total} = \Delta K_r + \Delta K_w \leq 100\ \%$$

Illustration 28: Combinations of displacement

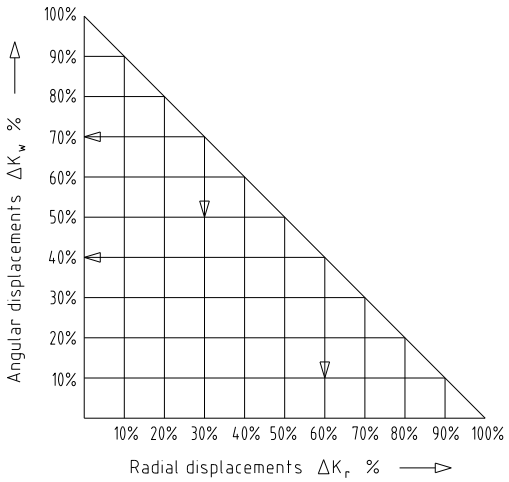

5 Start-up and lubrication

5.1 Start-up of the coupling

Before start-up of the coupling, inspect the tightening of the setscrews in the hubs, the alignment and the distance dimension E and adjust, if necessary, and also inspect all screw connections for the tightening torques specified.

If used in potentially explosive atmospheres the setscrews to fasten the hubs as well as all screw connections must be secured against working loose additionally, e. g. conglutinating with Loctite (average strength).

Finally the coupling protection against accidental contact must be fitted. It is required in accordance with DIN EN ISO 12100 (Safety of Machinery) and directives 2014/34/EU and SI 2016 No. 1107 and must protect against

- access with a little finger
- falling down of solid foreign objects.

Please check if a proper enclosure (ignition protection, coupling protection, contact protection) has been mounted and the operation of the coupling is not affected by the enclosure. The same applies for test runs and rotational direction inspections.

There must be a minimum distance of 15 mm between the cover of the coupling protection and the rotating components (coupling).
The cover may provide for openings intended for necessary heat dissipation. These openings have to comply with DIN EN ISO 13857.
The cover must be electrically conductive and included in the equipotential bonding. Bellhousings (magnesium share below 7.5 %) made of aluminium and damping rings (NBR) can be used as connecting element between pump and electric motor. The cover may only be taken off with standstill of the unit.

5 Start-up and lubrication

5.1 Start-up of the coupling

If the couplings are used in locations subject to dust explosion and in mining the user must make sure that there is no accumulation of dust <u>in a dangerous volume</u> between the cover and the coupling. The coupling must not operate in an accumulation of dust.

For covers with unlocked openings on the top face no light metals must be used if the couplings are used as equipment of equipment group II (*if possible, from stainless steel*).
If the couplings are used in mining (equipment group I M2), the cover must not be made of light metal. In addition, it must be resistant to higher mechanical loads than with use as equipment of equipment group II.

During operation of the coupling, please pay attention to

- different operating noise
- vibrations occurring.

If you note any irregularities with the coupling during operation, the drive unit must be switched off immediately. The cause of the breakdown must be specified by means of the table „Breakdowns“ and, if possible, be eliminated according to the proposals. The potential breakdowns specified can be hints only. To find out the cause all operating factors and machine components must be considered.

<u>Coating of coupling:</u>

If coated (priming, paintings, etc.) couplings are used in potentially explosive atmospheres, the requirements on conductibility and coating thickness must be considered. With paintings up to 200 µm electrostatic load does not have to be expected. If thicker paintings resp. coatings up to a layer thickness of a maximum of 2.0 mm are applied, the couplings are <u>not</u> permissible for gases and vapours of category IIC in potentially explosive areas, but only for gases and vapours of category IIA and IIB.
This also applies for multiple coatings exceeding an overall thickness of 200 µm. Make sure with painting or coating that the coupling components are conductively connected with the device/devices to be connected so that the equipotential bonding is not impeded by the paint or coat applied. Basically painting of the splines of sleeve and hub are not admitted to ensure an equipotential bonding.
In addition, make sure that the marking of the coupling remains legible.

5 Start-up and lubrication

5.2 Types of grease recommended

Only those greases recommended by KTR may be used.
Claims to warranty caused by the use of unrecommended greases are disregarded by KTR.

Manufacturer of grease	ExxonMobil	KLÜBER LUBRICATION	Castrol
Product description [1) 2)]	Mobilux EP 004	Klüberplex GE 11-680	Tribol GR 100 PD 00
Manufacturer of grease		LUBRICANTS. TECHNOLOGY. PEOPLE. FUCHS	
Product description [1) 2)]	Gadus S2 V220 00	RENOLIT GFW 00	

1) The greases mentioned above are suitable for operating temperatures from -30 °C to +110 °C.
2) Greases are recommended for a speed of > 1 m/s.
With a speed of < 1 m/s we recommend the grease RENOLIT EP X1 of Fuchs.
With a speed of < 2 rpm, please consult with KTR.

Please observe the manufacturer's instructions on handling greases.

5.3 Grease feeding

The grease feeding always has to correspond to the quantities specified!
By falling below the volume specified the coupling can become a source of ignition.

Table 12: Grease feeding

Size	Grease feeding [1)] in dm^3 (kg)			Size	Grease feeding [1)] in dm^3 (kg)		
	Type FA, DA, FR and DR	Type FB, DB, FH and DH	Type FAB and DAB		Type FA, DA, FR and DR	Type FB, DB, FH and DH	Type FAB and DAB
10	0.01	0.03	0.02	80	1.55	2.70	2.00
15	0.02	0.04	0.03	85	1.90	3.10	2.50
20	0.04	0.10	0.07	90	2.70	5.10	3.90
25	0.07	0.15	0.12	100	3.50	6.50	5.00
30	0.10	0.20	0.15	110	5.70	19.00	12.00
35	0.17	0.35	0.26	120	8.50	31.00	20.00
40	0.25	0.50	0.37	130	2)	2)	2)
45	0.32	0.70	0.50	140	2)	2)	2)
50	0.45	0.95	0.70	150	2)	2)	2)
55	0.60	1.35	1.00				
60	0.75	1.90	1.30				
70	1.10	2.50	1.80				

1) Grease filling per coupling half, only valid for dimensions acc. to chapter 1
2) Grease filling on consultation with KTR.

With the vertical type or standard types with special dimensions see dimensional drawing for grease filling or consult with KTR.
The upper half must be fully filled with grease.

In case if a dimensional drawing was prepared for the coupling, the dimensions specified have to be primarily observed.
The operator of the machine is to be provided with the dimensional drawing.

5 Start-up and lubrication

5.4 Grease capacity

Greases of various types and manufacturers must not be mixed!

Procedure of grease capacity:

- Turn the coupling so that the screw plugs (component 7) are in horizontal position (see illustration 29).
- Remove the screw plugs (component 7) along with the sealing washers (component 6) and fill in the grease, e. g. by means of a grease injector.
- Afterwards screw in the screw plugs (component 7) and the gaskets (component 6) again and prove for tightness.
- Repeat this process with the other coupling half.

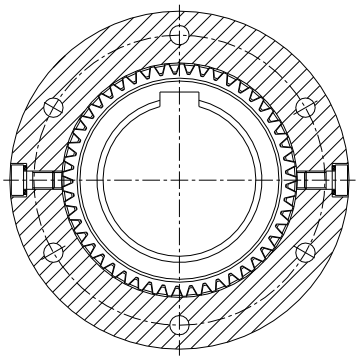

Illustration 29: Horizontal position of screw plugs

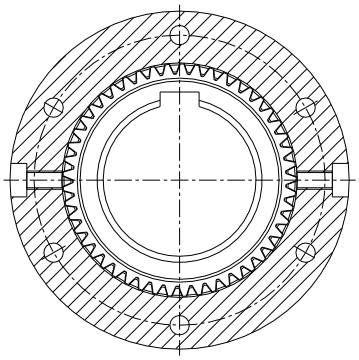

Illustration 30: Removing the screw plugs and sealing washers

Both screw plugs (component 7) have to be removed.
One hole serves as a filler hole, the other one as venting hole.

With each reassembly of the coupling we recommend to replace the flat gasket (component 5) and the dowel screws (component 3) as well as nuts (component 4).

In order to ensure a long service life of the coupling and avoid damages on the coupling, make sure to adhere to the quantities of grease specified for the different coupling sides.

Grease which has flown over has to be collected completely and disposed of according to the regulations that apply.

6 Breakdowns, causes and elimination

The failures specified below can lead to a use of the **GEARex®** coupling other than intended. In addition to the specifications given in these operating/assembly instructions make sure to avoid such failures.
The errors listed can only be clues to search for the failures. When searching for the failure the adjacent components must generally be considered.

The coupling can become a source of ignition with improper use.
Directive 2014/34/EU and UK directive SI 2016 No. 1107 require special care by the manufacturer and the user.

General failures with improper use:

- Important data for the coupling selection are not forwarded.
- The calculation of the shaft-hub-connection is not considered.
- Coupling components with damage occurred during transport are assembled.
- If the heated hubs are assembled, the permissible temperature is exceeded.
- If mounted in heated condition, the O-rings are heated excessively/damaged.
- The clearance of the components to be assembled is not coordinated with one another.
- Tightening torques are fallen below/exceeded.
- Components are mixed up by mistake/assembled incorrectly.
- No original **KTR** components (purchased parts) are used.
- Old/already worn out coupling components stored for too long are used.
- Maintenance intervals are not observed.
- No lubricants recommended by **KTR** are used.
- Operating temperatures are exceeded.
- Axial fastening of hubs is not available or working loose.
- Insufficient or inappropriate lubrication.
- Operating conditions were modified inappropriately.

Breakdowns	Causes	Hazard notes for potentially explosive atmospheres	Elimination
Different operating noise and/or vibrations occuring	Misalignment/permissible displacement figures are exceeded	Ignition risk due to hot surfaces and sparking	1) Set the unit out of operation 2) Eliminate the reason for the misalignment (e. g. loose foundation bolts, breaking of the engine mount, heat expansion of unit components, modification of the installation dimension E of the coupling) 3) Inspection of wear 4) Re-align the coupling
	Axial fastening of hub working loose		1) Set the unit out of operation 2) Inspect alignment of coupling 3) Inspection of wear 4) Secure the hubs axially and against working loose
	Lack of grease		1) Set the unit out of operation 2) Inspection of wear 3) Grease has to be replaced 4) Inspect the gaskets and replace gaskets, if necessary
Excessive wear of spline	Vibrations of drive	Ignition risk due to hot surfaces and sparking	1) Set the unit out of operation 2) Disassemble the coupling and remove residues of wear 3) Inspect coupling components and replace coupling components that have been damaged 4) Find out the reason for vibrations 5) Assemble new coupling components 6) Inspect alignment, adjust if necessary

6 Breakdowns, causes and elimination

Breakdowns	Causes	Hazard notes for potentially explosive atmospheres	Elimination
Excessive wear of spline	Misalignment/permissible displacement figures are exceeded	Ignition risk due to hot surfaces and sparking	1) Set the unit out of operation 2) Eliminate the reason for the misalignment (e. g. loose foundation bolts, breaking of the engine mount, heat expansion of unit components, modification of the installation dimension E of the coupling) 3) Inspection of wear 4) Re-align the coupling
	Lack of grease		1) Set the unit out of operation 2) Inspection of wear 3) Grease has to be replaced 4) Inspect the gaskets and replace gaskets, if necessary
Leakages/ escape of grease	O-rings have worn off		1) Set the unit out of operation 2) Inspection of wear 3) Drain lubricating grease 4) Replace gaskets 5) Filling of lubricating grease
	O-rings have been damaged subject to incorrect storage or during the assembly		1) Set the unit out of operation 2) Inspection of wear 3) Drain lubricating grease 4) Replace O-rings 5) Make sure proper storage of the O-rings or correct errors in assembly, respectively 6) Filling of lubricating grease
	O-rings are in contact with aggressive liquids/oils, influence of ozone, too high ambient temperatures		1) Set the unit out of operation 2) Inspection of wear 3) Drain lubricating grease 4) Eliminate negative influences on the O-rings 5) Replace O-rings 6) Filling of lubricating grease
Fracture of spline/fracture of sleeve	Fracture of spline/sleeve subject to high dynamic energy/overload	Ignition risk due to hot surfaces and sparking	1) Set the unit out of operation 2) Disassemble the coupling and remove the residues of fracture 3) Find out the reason for overload 4) Inspect coupling components and replace coupling components that have been damaged 5) Insert sleeve, assemble coupling components
	Operating parameters do not meet with the performance of the coupling		1) Set the unit out of operation 2) Disassemble the coupling and remove the residues of fracture 3) Review the operating parameters and select a bigger coupling (consider mounting space) 4) Assemble, align and lubricate the new coupling size according to the GEARex® operating/mounting instructions
	Operating error of the unit		1) Set the unit out of operation 2) Disassemble the coupling and remove the residues of fracture 3) Inspect coupling components and replace coupling components that have been damaged 4) Insert sleeve, assemble coupling components 5) Instruct and train the service staff

6 Breakdowns, causes and elimination

Breakdowns	Causes	Hazard notes for potentially explosive atmospheres	Elimination
Fracture of spline/fracture of sleeve	Lack of grease	Ignition risk due to hot surfaces and sparking	1) Set the unit out of operation 2) Disassemble the coupling and remove the residues of fracture 3) Inspect the gaskets and coupling components and replace, if necessary 4) Assemble, align and lubricate the new coupling components/gaskets as per GEARex® operating/mounting instructions
	Misalignment/permissible displacement figures are exceeded		1) Set the unit out of operation 2) Disassemble the coupling and remove the residues of fracture 3) Eliminate the reason for the misalignment (e. g. loose foundation bolts, breaking of the engine mount, heat expansion of unit components, modification of the installation dimension E of the coupling) 4) Assemble, align and lubricate the new coupling components as per GEARex® operating/mounting instructions

7 Maintenance and service

7.1 Intervals of maintenance

The coupling has to be regularly inspected for leakages/grease capacity, unregulated heating and modifications of the running noise. The inspection has to be performed during the general maintenance intervals, at least every quarter of a year.
Moreover, the correct fit of the protective device for rotating parts has to be inspected.

<u>The following items of inspection are the main components of maintenance work:</u>

Grease:	grease capacity, replacement of grease (see chapter 5.3 and 7.2)
Sealing elements:	leakages, replacing of sealing elements (see chapter 7.3)
Shaft displacements:	re-aligning the coupling (see chapter 4.6)
Spline:	wear, inspection of circumferential backlash (see chapter 7.5 and 7.4)

<u>Maintenance intervals in potentially explosive atmospheres:</u>

If the coupling is used in potentially explosive atmospheres, considerably shorter maintenance intervals have to be observed!
The coupling has to be inspected after approx. 200 operating hours or every month at the maximum.

7 Maintenance and service

7.2 Replacement of grease

In order to ensure a long service life of the coupling and avoid damages on the coupling, the quantities of grease specified for the different coupling sides and the intervals of replacement of lubricant absolutely have to be observed!

Grease has to be collected completely and disposed of according to the regulations that apply.

Please observe the manufacturer's instructions on handling greases.

The replacement of grease depends on various operating conditions such as load, ambient temperature, speed, shaft displacements and operating period. Anyway, a replacement of grease is recommended for an operation up to 70 °C after about 8,000 hours of operation, a maximum of 2 years and for an operation exceeding 70 °C after about 3,000 hours of operation, a maximum of 1 year.

Please note that when you replace the grease the remaining quantities in the coupling should be kept as small as possible.
Please have the manufacturer confirm the compatibility of the new grease with remainders of the former lubricant.

If the coupling is used in potentially explosive atmospheres, considerably shorter maintenance intervals have to be observed!
The coupling has to be inspected after approx. 200 operating hours or every month at the maximum.

Greases of various types and manufacturers must not be mixed!

<u>Procedure for the replacement of grease:</u>

- Inspect tightness and replace the sealing elements, if necessary.
- Turn the coupling until the screw plugs are in vertical position (see illustration 31).
- Remove the screw plugs (component 7) along with the sealing washers (component 6) and afterwards drain the grease into a suitable tank. To facilitate the replacement you may add thin oil.

Please check the compatibility of the oil with the grease!

- Perform grease feeding as per chapter 5.4.
- Repeat this process with the other coupling half.

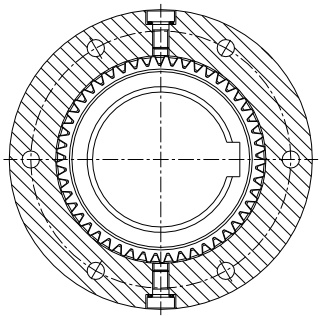

Illustration 31: Vertical position of screw plugs

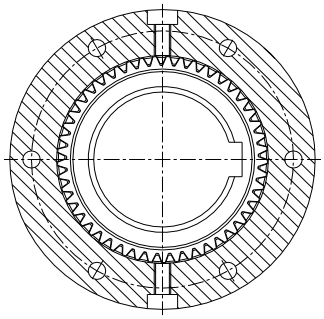

Illustration 32: Removing the screw plugs and sealing washers

7 Maintenance and service

7.3 Replacement of sealing elements

In case of leakages (escape of grease) defective sealing elements have to be replaced immediately!
The coupling may be damaged if these hints are disregarded.
The grease escaped has to be fully collected and disposed of according to the regulations that apply.

Replacement of flat gasket (component 5):

If the flat gasket (component 5) is defective/untight, it has to be replaced immediately. Furthermore we would recommend with each reassembly of the coupling to replace the flat gasket (component 5) and the dowel screws (component 3) as well as nuts (component 4).

- Drain the grease as per chapter 7.2.
- Unscrew and remove the screwing (components 3 and 4) of the sleeves (component 2).
- Shift the sleeve (component 2) axially backwards until the flat gasket (component 5) can be disassembled and replaced.
- Lightly grease the sealing surfaces and insert new flat gasket (component 5). Afterwards inspect the alignment and, if necessary, re-align and assemble.
- Perform grease feeding as per chapter 5.4.

Replacement of O-rings (component 8):

The O-rings (component 8) can be replaced with no need to shift the power packs to be connected, provided that the shaft shoulder is not bigger than the outside diameter DH of the hubs (component 1).

- Drain the grease as per chapter 7.2.
- Unscrew and remove the screwing (components 3 and 4) of the sleeves (component 2).
- Shift the sleeves (component 2) from the spline and the hub (component 1) until the O-ring (component 8) can be removed.
- Cut a new O-ring (component 8) radially in one position or cut the O-ring to peripheral length.
- Fit the O-ring (component 8) around the shaft and afterwards bond the separation line, e. g. with Loctite 401.
- Insert the O-ring (component 8) into the keyway of the sleeve (component 2).
- Assemble the sleeves as per chapter 4 and 5 and start with the operation.

If O-rings (component 8) only are to be used, the power packs to be combined have to be shifted and the coupling has to be disassembled as per chapter 7.8.

Protect O-rings (component 8) and flat gaskets (component 5) on the driving and driven side against damages and heat.

Observe the manufacturer's instructions regarding the use of adhesives.

7 Maintenance and service

7.4 Standard values for circumferential backlash

To inspect the torsional backlash the power pack switched off needs to be secured against accidental switch-on.

Driving side

- Rotate the hub opposite the direction of drive.

Here the sleeve must not be axially displaced from its position of wear.

- Mark sleeve (component 2) and hub (component 1) (see illustration 33).
- Turn the hub (component 1) in the direction of drive and measure the circumferential backlash ΔS_{max}.
- When reaching the torsional backlash $\Delta S_{max.}$ the coupling must be replaced.

Driven side

- Rotate the hub in the direction of the drive.

Here the sleeve must not be axially displaced from its position of wear.

- Mark sleeve (component 2) and hub (component 1) (see illustration 33).
- Turn the hub (component 1) opposite the direction of drive and measure the circumferential backlash ΔS_{max}.
- When reaching the torsional backlash $\Delta S_{max.}$ the coupling must be replaced.

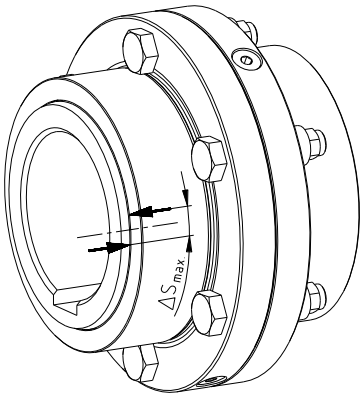

Illustration 33: Marking of hub and sleeve

7 Maintenance and service

7.5 Standard values of wear

With a torsional backlash of ≥ $\Delta S_{max.}$ in mm, the coupling must be replaced.

Reaching the limits for replacing depends on the operating conditions and the existing operating parameters.

In order to ensure a long service life of the coupling and avoid hazards with the use in potentially explosive atmospheres, the shaft ends must be accurately aligned.
Please absolutely observe the displacement figures specified (see table 11).
If the figures are exceeded, the coupling will be damaged.

Table 13: Values of wear

Size	Torsional backlash $\Delta S_{max.}$ in mm (limits of wear for each hub)	Size	Torsional backlash $\Delta S_{max.}$ in mm (limits of wear for each hub)
10	1.0	70	2.5
15	1.0	80	3.0
20	1.0	85	3.0
25	1.5	90	4.0
30	1.5	100	4.0
35	1.5	110	4.5
40	2.0	120	4.5
45	2.0	130	4.5
50	2.0	140	5.4
55	2.5	150	5.4
60	2.5		

7.6 Cleaning of the coupling

Ensure sufficient ventilation and follow the detergent manufacturers' notes regarding the handling of solvents and detergents.
Avoid any kind of ignition sources.

With assembly/disassembly of the coupling, the coupling components should be subject to careful cleaning. Specifically the sealing surfaces and the area of the spline should be free from dirt, wear and old grease.
A subsequent correct assembly (chapter 4) and start-up (chapter 5) has to be ensured.

7.7 Replacement of coupling

If the maximum standard values of wear as per chapters 7.4 and 7.5 are achieved, the coupling half has to be replaced completely.
Replacement may only be made in pairs (hub (component 1) and sleeve (component 2)) for each coupling half!
Disassembly has to be performed as per chapter 7.8.

If the advice is disregarded and the limit of wear is exceeded, the coupling may be damaged.
The failure on the coupling may cause standstill of the drive and the overall machine.
Rotating particles may cause danger to life.

7 Maintenance and service

7.8 Disassembly of the coupling

With disassembly, operation and maintenance of the coupling it has to be made sure that the entire drive train is secured against accidental switch-on.

In case if a dimensional drawing was prepared for the coupling, the dimensions specified have to be primarily observed.
The operator of the machine is to be provided with the dimensional drawing.

It is necessary to disassemble the coupling if coupling components have to be inspected for damages or have to be replaced. Moreover, disassembly is necessary to replace the sealing elements.

- Drain the grease as per chapter 7.2.
- Unscrew the fit bolt connection and push the sleeves (component 2) axially backwards until the spline is no longer engaged.
- Mark the spline of the sleeves (component 2) to the hubs (component 1).
- Move the power packs apart.
- Clean the coupling (see chapter 7.6) and inspect the coupling components, sealing surfaces and spline.
- Replace damaged components.
- Reassembly has to be performed as per chapters 4 and 5.

Components that are damaged or worn off have to be replaced!

With each reassembly of the coupling we recommend to replace the flat gasket (component 5) and the dowel screws (component 3) as well as nuts (component 4).

Heating the coupling components results in a higher danger of ignition.
A non-hazardous environment has to be assured.

If the coupling hubs (component 1) have to be disassembled, the axial fixing of the hubs has to be removed first. With constant heating (approx. 80 °C) of the coupling hubs (component 1) by means of a burner and a puller, the hubs (component 1) can be pulled from the shafts of the power packs.
The sealing surfaces, the spline, the hub bore and the shaft have to be inspected for damages.
Reassembly has to be performed as per the instructions in chapter 4 and 5.

Never use the sleeves (component 2) to pull off the hubs (component 1)!

Please make use of proper pullers. The shaft bearing must not be loaded.

8 Disposal

In respect of environmental protection we would ask you to dispose of the packaging resp. products on termination of their service life in accordance with the legal regulations resp. standards that apply.

- **Metal**
  Any metal components have to be cleaned and disposed of by scrap metal.
- **Gaskets**
  Gaskets can be disposed of by residual waste.
- **Lubricants**
  Lubricants have to be collected in suitable containers and disposed of by a waste disposal company.

9 Spares inventory, customer service addresses

We recommend to store major spare parts on site to ensure the readiness for use of the machine in case if a coupling fails.

Contact addresses of the KTR partners for spare parts and orders can be obtained from the KTR homepage at www.ktr.com.

The following details should be specified when ordering spare parts:

- Original order number
- Material number
- Description and number

KTR does not assume any liability or warranty for the use of spare parts and accessories which are not provided by KTR and for the damages which may incur as a result.

KTR Systems GmbH
Carl-Zeiss-Str. 25
D-48432 Rheine
Phone: +49 5971 798-0
E-mail: mail@ktr.com

10 Enclosure A

Advice and instructions regarding the use in Ex potentially explosive atmospheres

Types available:

FA, FB, FAB, DA, DB, DAB, FH, DH, FR and DR

10.1 Intended use in Ex potentially explosive atmospheres

Conditions of operation in Ex potentially explosive atmospheres

The **GEARex®** couplings are suitable for the use according to directives 2014/34/EU and SI 2016 No. 1107.

- Protection against hazards arising from lightning must follow the lightning protection concept of the machine or plant. The relevant regulations and policy for lightning protection must be observed.
- The equipotential bonding of the couplings is made by metal contact between coupling hub and shaft. This equipotential bonding must not be affected.

1. Industry (with the exception of mining)

- Equipment group II of category 2 and 3 (*coupling is not approved/not suitable for equipment group 1*)
- Substance group G (*gases, fogs, vapours*), zone 1 and 2 (*coupling is not approved/not suitable for zone 0*)
- Substance group D (*dusts*), zone 21 and 22 (*coupling is not approved/not suitable for zone 20*)
- Explosion group IIC (*gases, fogs, vapours*) *(explosion groups IIA and IIB are included in IIC)* and explosion group IIIC (*dusts*) *(explosion groups IIIA and IIIB are included in IIIC)*

Temperature class:

Temperature class	Ambient or operating temperature T_a	Max. surface temperature [1)]
T4	-30 °C to +90 °C	+110 °C
T5	-30 °C to +75 °C	+95 °C
T6	-30 °C to +60 °C	+80 °C

Explanation:
The maximum surface temperatures each result from the maximum permissible ambient or operating temperature T_a plus the maximum temperature increase ΔT of 20 K to be considered. For the temperature class a safety margin subject to standard of 5 K is added.
1) The maximum surface temperature of +110 °C applies for the use in locations which are potentially subject to dust explosion.

In potentially explosive atmospheres

- the ignition temperature of dusts generated must at least be 1.5 times the surface temperature to be considered
- the glow temperature must at least be the surface temperature to be considered plus a safety distance of 75 K.
- the gases and vapours generated must amount to the temperature class specified.

2. Mining

Equipment group I of category M2 (*coupling is not approved/not suitable for equipment group M1*).
Permissible ambient temperature -30 °C to +90 °C.

10 Enclosure A

Advice and instructions regarding the use in Ex potentially explosive atmospheres

10.2 Inspection intervals for couplings in Ex potentially explosive atmospheres

Explosion group	Inspection intervals
M2 2G 2D No gases and vapours of explosion group IIC	An inspection of the circumferential backlash and a visual inspection of the components must be performed after 2,000 operating hours for the first time, at the latest after 6 months after start-up of the coupling. If you note insignificant or no wear on the components upon this initial inspection, further inspections can each be performed after 4,000 operating hours or at the latest after 18 months, provided that the operating parameters remain the same. If you note significant wear during the initial inspection so that it would be recommendable to replace the components, find out the cause according to the table „Breakdowns“, if possible. The maintenance intervals must be adjusted to the modified operating parameters without fail.
M2 2G 2D Gases and vapours of explosion group IIC	An inspection of the circumferential backlash and a visual inspection of the components must be performed after 1,000 operating hours for the first time, at the latest after 3 months after start-up of the coupling. If you note insignificant or no wear on the components upon this initial inspection, further inspections can each be performed after 2,000 operating hours or at the latest after 12 months, provided that the operating parameters remain the same. If you note significant wear during the initial inspection so that it would be recommendable to replace the components, find out the cause according to the table „Breakdowns“, if possible. The maintenance intervals must be adjusted to the modified operating parameters without fail.

GEARex® coupling

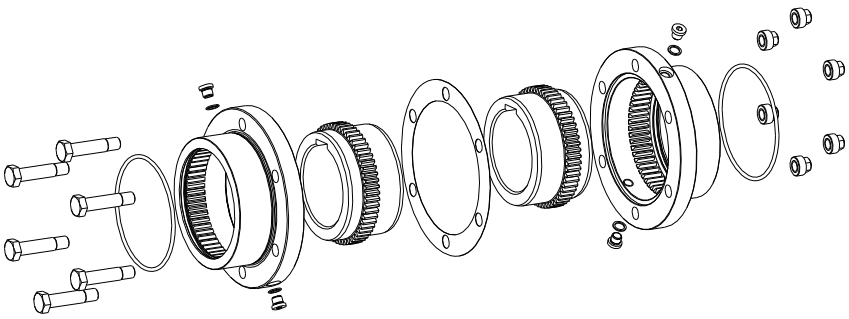

Illustration 34: GEARex® coupling

Here the backlash between the spline of the hub and the sleeve must be inspected via torsional backlash, each separately from the driving and the driven side.
When reaching the torsional backlash $\Delta S_{max.}$, the respective coupling half (hub and sleeve) must be replaced immediately, irrespective of the inspection intervals.

10 Enclosure A

Advice and instructions regarding the use in Ex potentially explosive atmospheres

10.3 Ex marking of coupling for potentially explosive atmospheres

The explosion protection marking of the GEARex® all-steel gear coupling is applied on the front of the hub resp. on the outside diameter of the sleeve.

For the complete marking refer to the operating/assembly instructions and/or the delivery note/package.

<u>The following marking applies for the products:</u>

- Marking for unpainted res. coated or painted couplings with a layer thickness < 200 µm

	I M2	Ex h	I				Mb	X
	II 2G	Ex h	IIC	T6	…	T4	Gb	X
	II 2D	Ex h	IIIC	T80 °C	…	T110 °C	Db	X
<Year>		-30 °C ≤ T_a ≤		+60 °C	…	+90 °C		

KTR Systems GmbH, Carl-Zeiss-Str. 25, D-48432 Rheine

- Marking for painted couplings with a layer thickness of 0.2 mm to max. 2.0 mm

	I M2	Ex h	I				Mb	X
	II 2G	Ex h	IIB	T6	…	T4	Gb	X
	II 2D	Ex h	IIIC	T80 °C	…	T110 °C	Db	X
<Year>		-30 °C ≤ T_a ≤		+60 °C	…	+90 °C		

KTR Systems GmbH, Carl-Zeiss-Str. 25, D-48432 Rheine

<u>Short marking:</u>
(A short marking is only made if not possible differently for reason of space or functioning.)

GEARex®
<Year>

<u>Deviating marking applied until 31st October 2019:</u>

Short marking: II 2G c IIC T X/II 2D c T X/I M2 c X

Complete marking:
II 2G c IIC T6, T5 resp. T4
-30 °C ≤ T_a ≤ +65 °C, +80 °C resp. +90 °C
II 2D c T 110 °C -30 °C ≤ T_a ≤ +90 °C
I M2 c -30 °C ≤ T_a ≤ +90 °C

10 Enclosure A

Advice and instructions regarding the use in Ex potentially explosive atmospheres

10.3 Ex marking of coupling for potentially explosive atmospheres

Comments on marking

Equipment group I	Mining
Equipment group II	Non-mining
Equipment category 2G	Equipment ensuring a high level of safety, suitable for zone 1
Equipment category 2D	Equipment ensuring a high level of safety, suitable for zone 21
Equipment category M2	Equipment ensuring a high level of safety must be able to be switched off when an explosive atmosphere occurs
D	Dust
G	Gases and vapours
Ex h	Nonelectrical explosion protection
IIB	Gases and vapours of class IIB (including IIA)
IIC	Gases and vapours of class IIC (including IIA and IIB)
IIIC	Electrically conductive dusts of class IIIC (including IIIA and IIIB)
T6 … T4	Temperature class to be considered, depending on the ambient temperature
T80 °C … T110 °C	Maximum surface temperature to be considered, depending on the ambient temperature
-30 °C ≤ T_a ≤ +60 °C … +90 °C or -30 °C ≤ T_a ≤ +90 °C	Permissible ambient temperature from -30 °C to +60 °C resp. -30 °C to +90 °C
Gb, Db, Mb	Equipment protection level, analogous to the equipment category
X	For a safe use of the couplings particular conditions apply

If the symbol Ⓑ was punched in addition to marking Ⓤ, the coupling component was supplied by KTR as an unbored or pilot bored version (see chapter 4.2 of the present operating/assembly instructions).

10 Enclosure A

Advice and instructions regarding the use in Ex potentially explosive atmospheres

10.4 EU Declaration of conformity

EU Declaration of Conformity resp. Certificate of Conformity

corresponding to EU directive 2014/34/EU dated 26 February 2014
and to the legal regulations adopted for its implementation

The manufacturer - KTR Systems GmbH, Carl-Zeiss-Str. 25, D-48432 Rheine - states that the

GEARex® All-steel gear couplings

in an explosion-proof design described in these assembly instructions are equipment resp. components corresponding to article 2, 1. of directive 2014/34/EU and comply with the general safety and health specifications according to enclosure II of directive 2014/34/EU.
This declaration of conformity resp. certificate of conformity is issued under the sole responsibility of the manufacturer KTR Systems GmbH.

The coupling described in here complies with the specifications of the following standards/rules:

EN ISO 80079-36:2016-12
EN ISO 80079-37:2016-12
EN ISO/IEC 80079-38:2017-10
IEC/TS 60079-32-1:2020-01-24

The GEARex® is in accordance with the specifications respectively the applicable requirements of directive 2014/34/EU.

The couplings marked with the symbol ⓤ are not equipment, but components as defined in the directive 2014/34/EU and are not marked with CE. These couplings are unbored or pilot bored only and must be subjected to a final conformity assessment after finish drilling. For the necessary information refer to the operating instructions.

According to article 13 (1) b) ii) of directive 2014/34/EU the technical documentation is deposited with the notified body (type examination certificate IBExU11ATEXB016 X):

IBExU
Institut für Sicherheitstechnik GmbH
Identification number: 0637
Fuchsmühlenweg 7

09599 Freiberg

Rheine, Place	2022-05-31 Date	i. V. Reinhard Wibbeling Head of Engineering	i. A. Ansgar Silies Product Manager

10 Enclosure A

Advice and instructions regarding the use in Ex potentially explosive atmospheres

10.5 UK Declaration of conformity

UK Declaration of Conformity resp. Certificate of Conformity

corresponding to UK directive SI 2016 No. 1107 dated 26 February 2014
and to the legal provisions adopted for its implementation

The manufacturer - KTR Systems GmbH, Carl-Zeiss-Str. 25, D-48432 Rheine - states that the

GEARex® All-steel gear couplings

in an explosion-proof design described in these assembly instructions are equipment resp. components corresponding to directive SI 2016 No. 1107 and comply with the general safety and health requirements according to directive SI 2016 No. 1107.
This declaration of conformity resp. certificate of conformity is issued under the sole responsibility of the manufacturer KTR Systems GmbH.

The coupling described in here complies with the specifications of the following standards/rules:

EN ISO 80079-36:2016-12
EN ISO 80079-37:2016-12
EN ISO/IEC 80079-38:2017-10
IEC/TS 60079-32-1:2020-01-24

The GEARex® is in accordance with the specifications respectively the applicable specifications of directive SI 2016 No. 1107.

The couplings marked with the symbol ⓪ are not equipment, but components as defined in the directive SI 2016 No. 1107 and are not marked with CE. These couplings are unbored or pilot bored only and must be subjected to a final conformity assessment after finish drilling. For the necessary information refer to the operating instructions.

According to directive SI 2016 No. 1107 the technical documentation is deposited with the notified body:

Eurofins CML
Identification number: 2503

Rheine, Place	2022-05-31 Date	i. V. Reinhard Wibbeling Head of Engineering	i. A. Ansgar Silies Product Manager